Video Intercom Villa Door Station

User Manual

Legal Information

About this Document

- This Document includes instructions for using and managing the Product. Pictures, charts, images and all other information hereinafter are for description and explanation only.
- The information contained in the Document is subject to change, without notice, due to firmware updates or other reasons. Please find the latest version of the Document at the Hikvision website (***https://www.hikvision.com***). Unless otherwise agreed, Hangzhou Hikvision Digital Technology Co., Ltd. or its affiliates (hereinafter referred to as "Hikvision") makes no warranties, express or implied.
- Please use the Document with the guidance and assistance of professionals trained in supporting the Product.

About this Product

This product can only enjoy the after-sales service support in the country or region where the purchase is made.

Acknowledgment of Intellectual Property Rights

- Hikvision owns the copyrights and/or patents related to the technology embodied in the Products described in this Document, which may include licenses obtained from third parties.
- Any part of the Document, including text, pictures, graphics, etc., belongs to Hikvision. No part of this Document may be excerpted, copied, translated, or modified in whole or in part by any means without written permission.
- HIKVISION and other Hikvision's trademarks and logos are the properties of Hikvision in various jurisdictions.
- Other trademarks and logos mentioned are the properties of their respective owners.

LEGAL DISCLAIMER

- TO THE MAXIMUM EXTENT PERMITTED BY APPLICABLE LAW, THIS DOCUMENT AND THE PRODUCT DESCRIBED, WITH ITS HARDWARE, SOFTWARE AND FIRMWARE, ARE PROVIDED "AS IS" AND "WITH ALL FAULTS AND ERRORS". HIKVISION MAKES NO WARRANTIES, EXPRESS OR IMPLIED, INCLUDING WITHOUT LIMITATION, MERCHANTABILITY, SATISFACTORY QUALITY, OR FITNESS FOR A PARTICULAR PURPOSE. THE USE OF THE PRODUCT BY YOU IS AT YOUR OWN RISK. IN NO EVENT WILL HIKVISION BE LIABLE TO YOU FOR ANY SPECIAL, CONSEQUENTIAL, INCIDENTAL, OR INDIRECT DAMAGES, INCLUDING, AMONG OTHERS, DAMAGES FOR LOSS OF BUSINESS PROFITS, BUSINESS INTERRUPTION, OR LOSS OF DATA, CORRUPTION OF SYSTEMS, OR LOSS OF DOCUMENTATION, WHETHER BASED ON BREACH OF CONTRACT, TORT (INCLUDING NEGLIGENCE), PRODUCT LIABILITY, OR OTHERWISE, IN CONNECTION WITH THE USE OF THE

PRODUCT, EVEN IF HIKVISION HAS BEEN ADVISED OF THE POSSIBILITY OF SUCH DAMAGES OR LOSS.

- YOU ACKNOWLEDGE THAT THE NATURE OF THE INTERNET PROVIDES FOR INHERENT SECURITY RISKS, AND HIKVISION SHALL NOT TAKE ANY RESPONSIBILITIES FOR ABNORMAL OPERATION, PRIVACY LEAKAGE OR OTHER DAMAGES RESULTING FROM CYBER-ATTACK, HACKER ATTACK, VIRUS INFECTION, OR OTHER INTERNET SECURITY RISKS; HOWEVER, HIKVISION WILL PROVIDE TIMELY TECHNICAL SUPPORT IF REQUIRED.
- YOU AGREE TO USE THIS PRODUCT IN COMPLIANCE WITH ALL APPLICABLE LAWS, AND YOU ARE SOLELY RESPONSIBLE FOR ENSURING THAT YOUR USE CONFORMS TO THE APPLICABLE LAW. ESPECIALLY, YOU ARE RESPONSIBLE, FOR USING THIS PRODUCT IN A MANNER THAT DOES NOT INFRINGE ON THE RIGHTS OF THIRD PARTIES, INCLUDING WITHOUT LIMITATION, RIGHTS OF PUBLICITY, INTELLECTUAL PROPERTY RIGHTS, OR DATA PROTECTION AND OTHER PRIVACY RIGHTS. YOU SHALL NOT USE THIS PRODUCT FOR ANY PROHIBITED END-USES, INCLUDING THE DEVELOPMENT OR PRODUCTION OF WEAPONS OF MASS DESTRUCTION, THE DEVELOPMENT OR PRODUCTION OF CHEMICAL OR BIOLOGICAL WEAPONS, ANY ACTIVITIES IN THE CONTEXT RELATED TO ANY NUCLEAR EXPLOSIVE OR UNSAFE NUCLEAR FUEL-CYCLE, OR IN SUPPORT OF HUMAN RIGHTS ABUSES.
- IN THE EVENT OF ANY CONFLICTS BETWEEN THIS DOCUMENT AND THE APPLICABLE LAW, THE LATTER PREVAILS.

© Hangzhou Hikvision Digital Technology Co., Ltd. All rights reserved.

Symbol Conventions

The symbols that may be found in this document are defined as follows.

Symbol	Description
Danger	Indicates a hazardous situation which, if not avoided, will or could result in death or serious injury.
Caution	Indicates a potentially hazardous situation which, if not avoided, could result in equipment damage, data loss, performance degradation, or unexpected results.
Note	Provides additional information to emphasize or supplement important points of the main text.

Safety Instruction

Warning

- All the electronic operation should be strictly compliance with the electrical safety regulations, fire prevention regulations and other related regulations in your local region.
- Please use the power adapter, which is provided by normal company. The power consumption cannot be less than the required value.
- Do not connect several devices to one power adapter as adapter overload may cause over-heat or fire hazard.
- Please make sure that the power has been disconnected before you wire, install or dismantle the device.
- When the product is installed on wall or ceiling, the device shall be firmly fixed.
- If smoke, odors or noise rise from the device, turn off the power at once and unplug the power cable, and then please contact the service center.
- If the product does not work properly, please contact your dealer or the nearest service center. Never attempt to disassemble the device yourself. (We shall not assume any responsibility for problems caused by unauthorized repair or maintenance.)

Caution

- Do not drop the device or subject it to physical shock, and do not expose it to high electromagnetism radiation. Avoid the equipment installation on vibrations surface or places subject to shock (ignorance can cause equipment damage).
- Do not place the device in extremely hot (refer to the specification of the device for the detailed operating temperature), cold, dusty or damp locations, and do not expose it to high electromagnetic radiation.
- The device cover for indoor use shall be kept from rain and moisture.
- Exposing the equipment to direct sun light, low ventilation or heat source such as heater or radiator is forbidden (ignorance can cause fire danger).
- Do not aim the device at the sun or extra bright places. A blooming or smear may occur otherwise (which is not a malfunction however), and affecting the endurance of sensor at the same time.
- Please use the provided glove when open up the device cover, avoid direct contact with the device cover, because the acidic sweat of the fingers may erode the surface coating of the device cover.
- Please use a soft and dry cloth when clean inside and outside surfaces of the device cover, do not use alkaline detergents.
- Please keep all wrappers after unpack them for future use. In case of any failure occurred, you need to return the device to the factory with the original wrapper. Transportation without the original wrapper may result in damage on the device and lead to additional costs.

- Improper use or replacement of the battery may result in hazard of explosion. Replace with the same or equivalent type only. Dispose of used batteries according to the instructions provided by the battery manufacturer.
- Input voltage should meet both the SELV and the Limited Power Source according to 60950-1 standard.
- If a power adapter is provided in the device package, use the provided adapter only. If no power adapter is provided, ensure the power adapter or other power supply complies with Limited Power Source. Refer to the product label for the power supply output parameters.

Regulatory Information

FCC Information

Please take attention that changes or modification not expressly approved by the party responsible for compliance could void the user's authority to operate the equipment.
FCC compliance: This equipment has been tested and found to comply with the limits for a Class B digital device, pursuant to part 15 of the FCC Rules. These limits are designed to provide reasonable protection against harmful interference in a residential installation. This equipment generates, uses and can radiate radio frequency energy and, if not installed and used in accordance with the instructions, may cause harmful interference to radio communications. However, there is no guarantee that interference will not occur in a particular installation. If this equipment does cause harmful interference to radio or television reception, which can be determined by turning the equipment off and on, the user is encouraged to try to correct the interference by one or more of the following measures:
—Reorient or relocate the receiving antenna.
—Increase the separation between the equipment and receiver.
—Connect the equipment into an outlet on a circuit different from that to which the receiver is connected.
—Consult the dealer or an experienced radio/TV technician for help
FCC Conditions
This device complies with part 15 of the FCC Rules. Operation is subject to the following two conditions:
1. This device may not cause harmful interference.
2. This device must accept any interference received, including interference that may cause undesired operation.

EU Conformity Statement

This product and - if applicable - the supplied accessories too are marked with "CE" and comply therefore with the applicable harmonized European standards listed under the EMC Directive 2014/30/EU, the RoHS Directive 2011/65/EU

2012/19/EU (WEEE directive): Products marked with this symbol cannot be disposed of as unsorted municipal waste in the European Union. For proper recycling, return this product to your local supplier upon the purchase of equivalent new equipment, or dispose of it at designated collection points. For more information see: www.recyclethis.info

2006/66/EC (battery directive): This product contains a battery that cannot be disposed of as unsorted municipal waste in the European Union. See the product documentation for specific battery information. The battery is marked with this symbol, which may include lettering to indicate cadmium (Cd), lead (Pb), or mercury (Hg). For proper recycling, return the battery to your supplier or to a designated collection point. For more information see:www.recyclethis.info

Industry Canada ICES-003 Compliance

This device meets the CAN ICES-3 (B)/NMB-3(B) standards requirements.
This device complies with Industry Canada licence-exempt RSS standard(s). Operation is subject to the following two conditions:

1. this device may not cause interference, and
2. this device must accept any interference, including interference that may cause undesired operation of the device.

Le présent appareil est conforme aux CNR d'Industrie Canada applicables aux appareils radioexempts de licence. L'exploitation est autorisée aux deux conditions suivantes :

1. l'appareil ne doit pas produire de brouillage, et
2. l'utilisateur de l'appareil doit accepter tout brouillage radioélectrique subi, même si le brouillage est susceptible d'en compromettre le fonctionnement.

Under Industry Canada regulations, this radio transmitter may only operate using an antenna of a type and maximum (or lesser) gain approved for the transmitter by Industry Canada. To reduce potential radio interference to other users, the antenna type and its gain should be so chosen that the equivalent isotropically radiated power (e.i.r.p.) is not more than that necessary for successful communication.
Conformément à la réglementation d'Industrie Canada, le présent émetteur radio peut fonctionner avec une antenne d'un type et d'un gain maximal (ou inférieur) approuvé pour l'émetteur par Industrie Canada. Dans le but de réduire les risques de brouillage radioélectrique à l'intention des autres utilisateurs, il faut choisir le type d'antenne et son gain de sorte que la puissance isotrope

rayonnée équivalente (p.i.r.e.) ne dépasse pas l'intensité nécessaire à l'établissement d'une communication satisfaisante.
This equipment should be installed and operated with a minimum distance 20cm between the radiator and your body.
Cet équipement doit être installé et utilisé à une distance minimale de 20 cm entre le radiateur et votre corps.

Contents

Chapter 1 Appearance 1

Chapter 2 Terminal and Wiring Description 3

2.1 Terminal Description 3

2.2 Wiring Description 4

2.2.1 Door Lock Wiring 4

2.2.2 Door Contact Wiring 5

2.2.3 Exit Button Wiring 6

2.2.4 Alarm Input Device Wiring 7

Chapter 3 Installation 8

3.1 Accessory Introduction 8

3.2 Surface Mounting without Protective Shield 9

3.3 Surface Mounting with Protective Shield 12

Chapter 4 Activation 16

4.1 Activate via SADP 16

4.2 Activate via Web Browser 17

4.3 Activate Device via Client Software 18

4.3.1 Edit Network Parameters 19

Chapter 5 Quick Operation via Web Browser 20

5.1 Select Language 20

5.2 Time Settings 20

5.3 Privacy Settings 20

5.4 Administrator Settings 21

5.5 No. and System Network 21

Chapter 6 Operation via Web Browser 23

6.1 Login 23

6.2 Forget Password 23

6.3 Overview 24
6.4 Person Management 25
6.5 Search Event 26
6.6 Device Management 27
6.7 Configuration 28
6.7.1 View Device Information via PC Web 28
6.7.2 Set Time 28
6.7.3 Set DST 29
6.7.4 Change Administrator's Password 29
6.7.5 Online Users 30
6.7.6 Set Secure Door Control Unit Parameters via PC Web 30
6.7.7 Set I/O Parameters 30
6.7.8 Elevator Control 30
6.7.9 View Device Arming/Disarming Information 32
6.7.10 Network Settings 32
6.7.11 Set Video and Audio Parameters 37
6.7.12 Adjust Display Settings 39
6.7.13 Event Settings 40
6.7.14 Access Control Settings 42
6.7.15 Call Settings 46
6.8 Maintenance and Security 50
6.8.1 Upgrade and Maintenance 50
6.8.2 Device Debugging 51
6.8.3 View Log via PC Web 52
6.8.4 Certificate Management 52
Chapter 7 Configuration via Client Software 54
7.1 Device Management 54
7.1.1 Add Online Device 54

7.1.2 Add Device by IP Address 56
7.1.3 Add Device by IP Segment 56
7.2 Live View via Door Station 56
7.3 Organization Management 56
7.3.1 Add Organization 56
7.3.2 Modify and Delete Organization 57
7.4 Person Management 57
7.4.1 Add Person 57
7.4.2 Modify and Delete Person 58
7.4.3 Change Person to Other Organization 58
7.4.4 Import and Export Person Information 59
7.4.5 Get Person Information from Device 59
7.4.6 Issue Card in Batch 60
7.5 Video Intercom Settings 62
7.5.1 Receive Call from Door Station 63
7.5.2 Release Notice 63
7.5.3 Search Video Intercom Information 64
7.5.4 Upload Armed Information 66
Chapter 8 Video Intercom Operation 67
8.1 Call Resident 67
8.2 Unlock Door 67

Chapter 1 Appearance

Front Panel and Rear Panel

Here takes DS-KV6113-WPE1 for example.

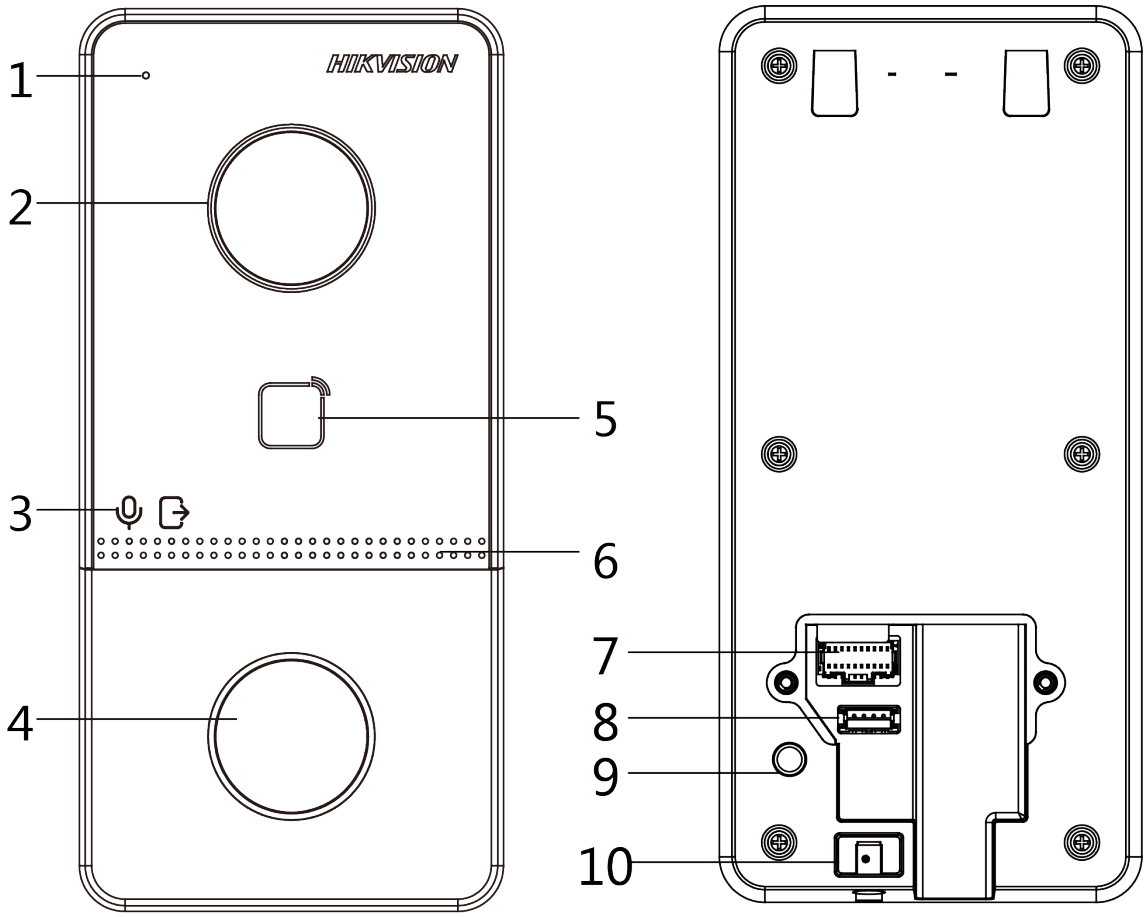

Figure 1-1 Front Panel and Rear Panel

Table 1-1 Description

No.	Description
1	Microphone
2	Camera
3	Indicator Unlock (Green)/ Call (Orange)/ Communicate (White)

No.	Description
4	Button
5	Card Reading Area
6	Loudspeaker
7	Terminals
8	Debugging Port
9	TAMPER
10	Set Screw

Bottom Panel

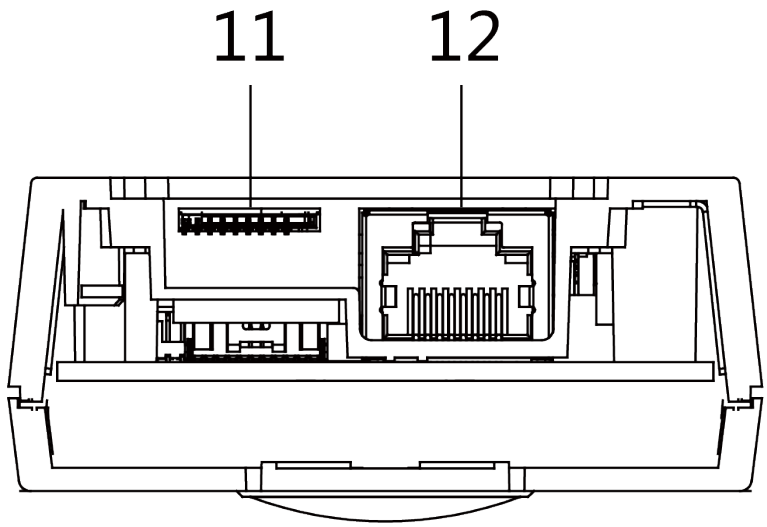

Figure 1-2 Bottom Panel

Table 1-2 Description

No.	Description
11	TF Card Slot (Reserved)
12	Network Interface

Chapter 2 Terminal and Wiring Description

2.1 Terminal Description

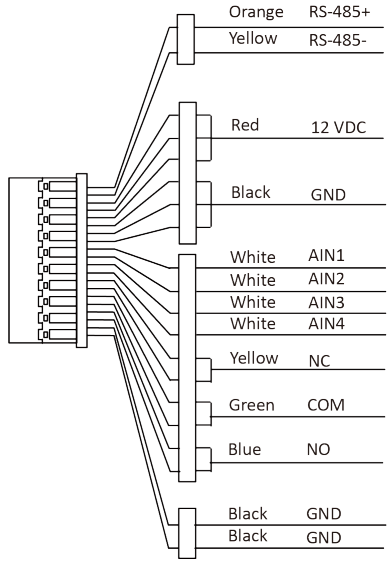

Figure 2-1 Terminal Description

Note

RS-485 terminal is not supported.

2.2 Wiring Description

2.2.1 Door Lock Wiring

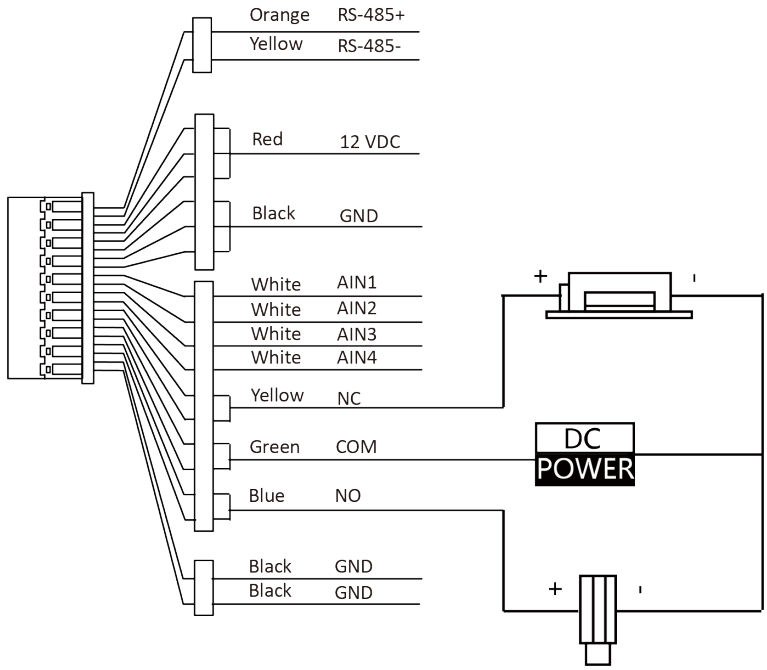

Figure 2-2 Door Lock Wiring

Note

Terminal NC/COM is set as default for accessing magnetic lock/electric bolt; terminal NO/COM is set as default for accessing electric strike.

2.2.2 Door Contact Wiring

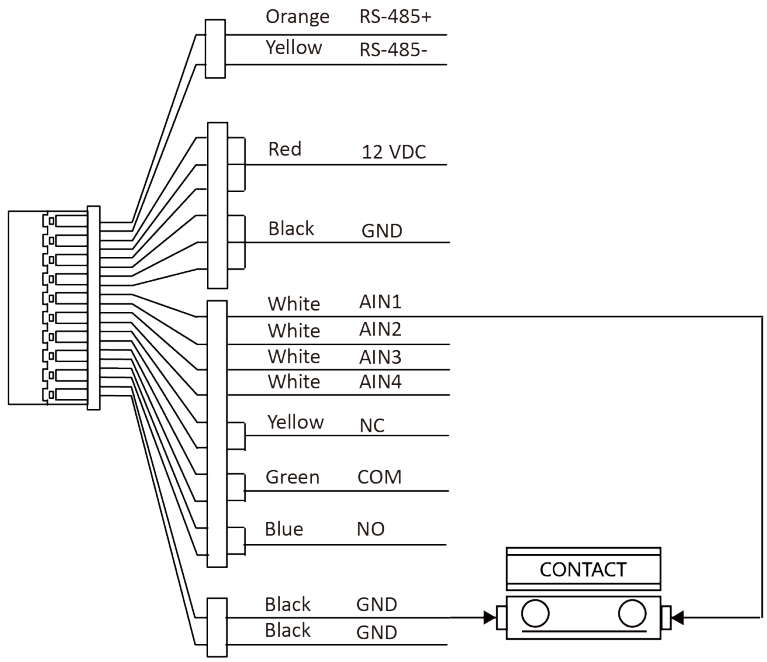

Figure 2-3 Door Contact Wiring

2.2.3 Exit Button Wiring

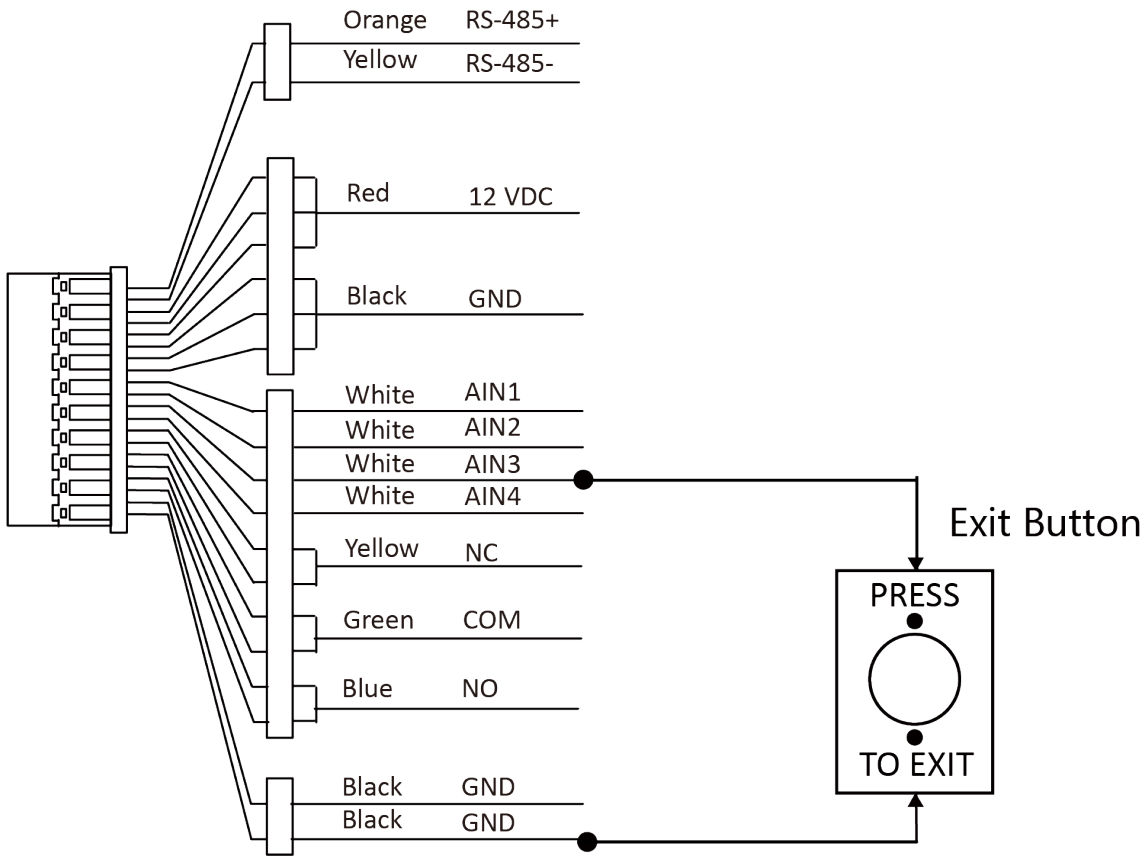

Figure 2-4 Exit Botton Wiring

2.2.4 Alarm Input Device Wiring

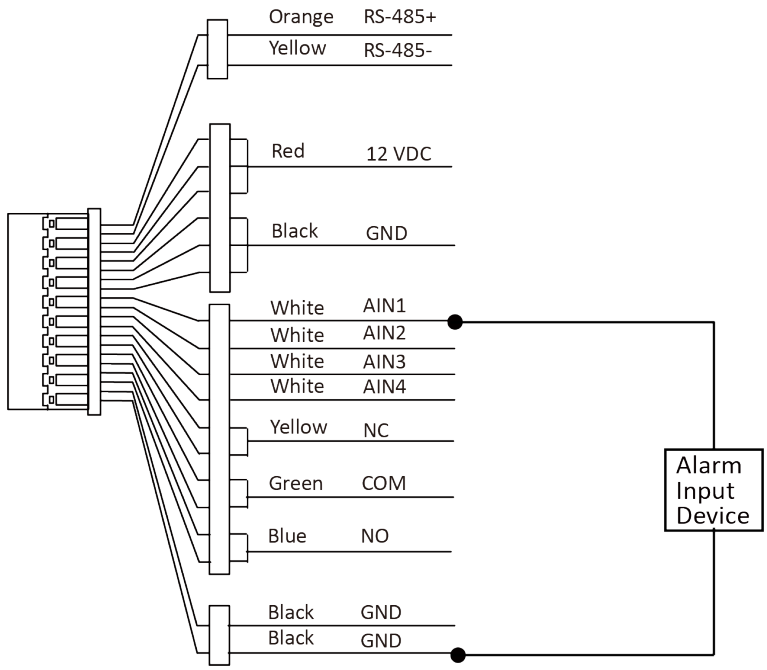

Figure 2-5 Alarm Input Device Wiring

Chapter 3 Installation

Note

- Make sure the device in the package is in good condition and all the assembly parts are included.
- Make sure your power supply matches your door station.
- Make sure all the related equipment is power-off during the installation.
- Check the product specification for the installation environment.

3.1 Accessory Introduction

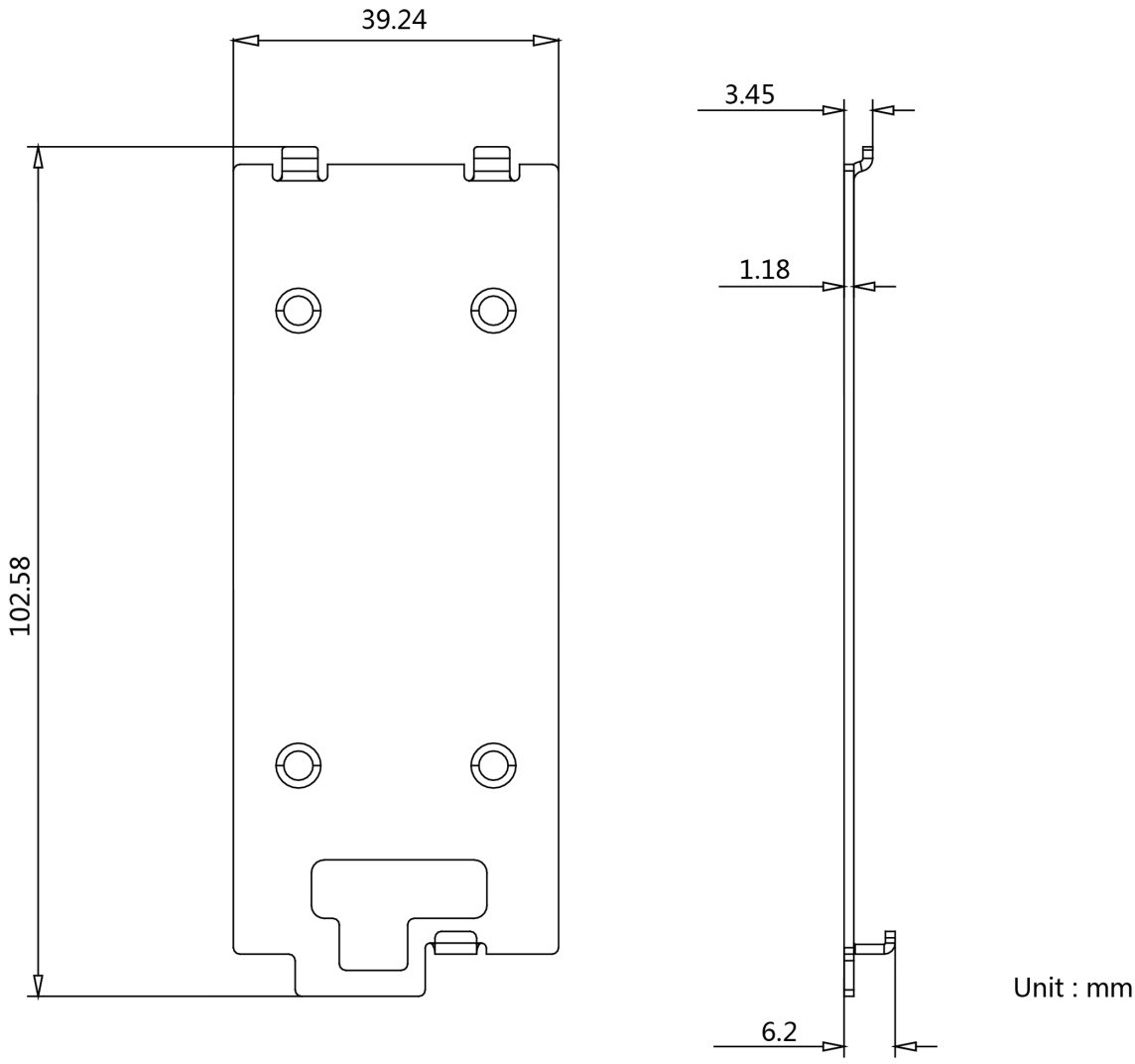

Figure 3-1 Accessory Introduction

Note

The dimension of the mounting plate is 102.58 mm × 39.24 mm × 6.2 mm.

3.2 Surface Mounting without Protective Shield

Before You Start

- Tools that you need to prepare for installation: Drill (ø2.846) and gradienter.
- Purchase the protective shield before installation.

Steps

1. Stick the mounting template on the wall. Drill screw holes according to the mounting template. Remove the template from the wall.

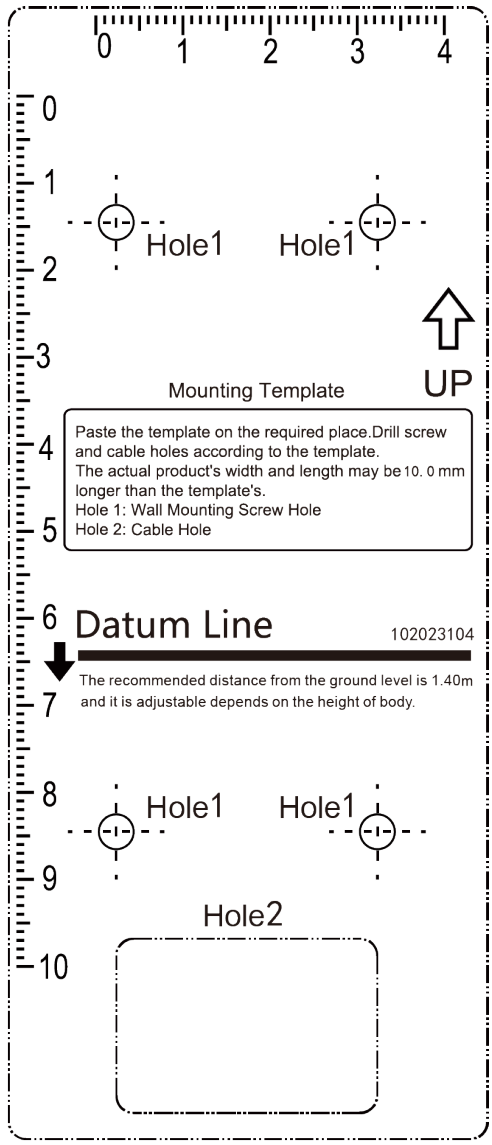

Figure 3-2 Mounting Template

2. Secure the mounting plate on the wall with 4 supplied screws according to the screw holes.
3. Install the villa door station to the mounting plate. Fix the device on the mounting plate with the set screw.

Note

Apply silicone sealant among the cable wiring area to keep the raindrop from entering.

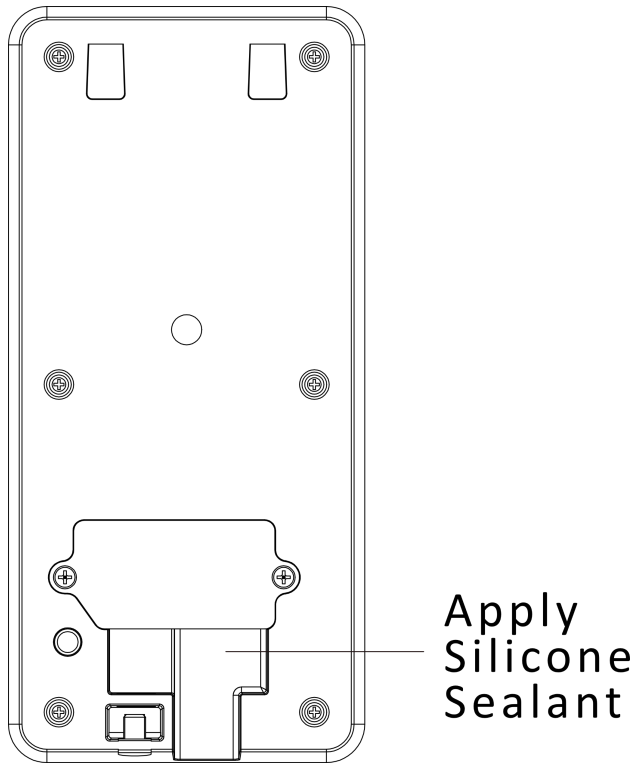

Figure 3-3 Apply Silicone Sealant

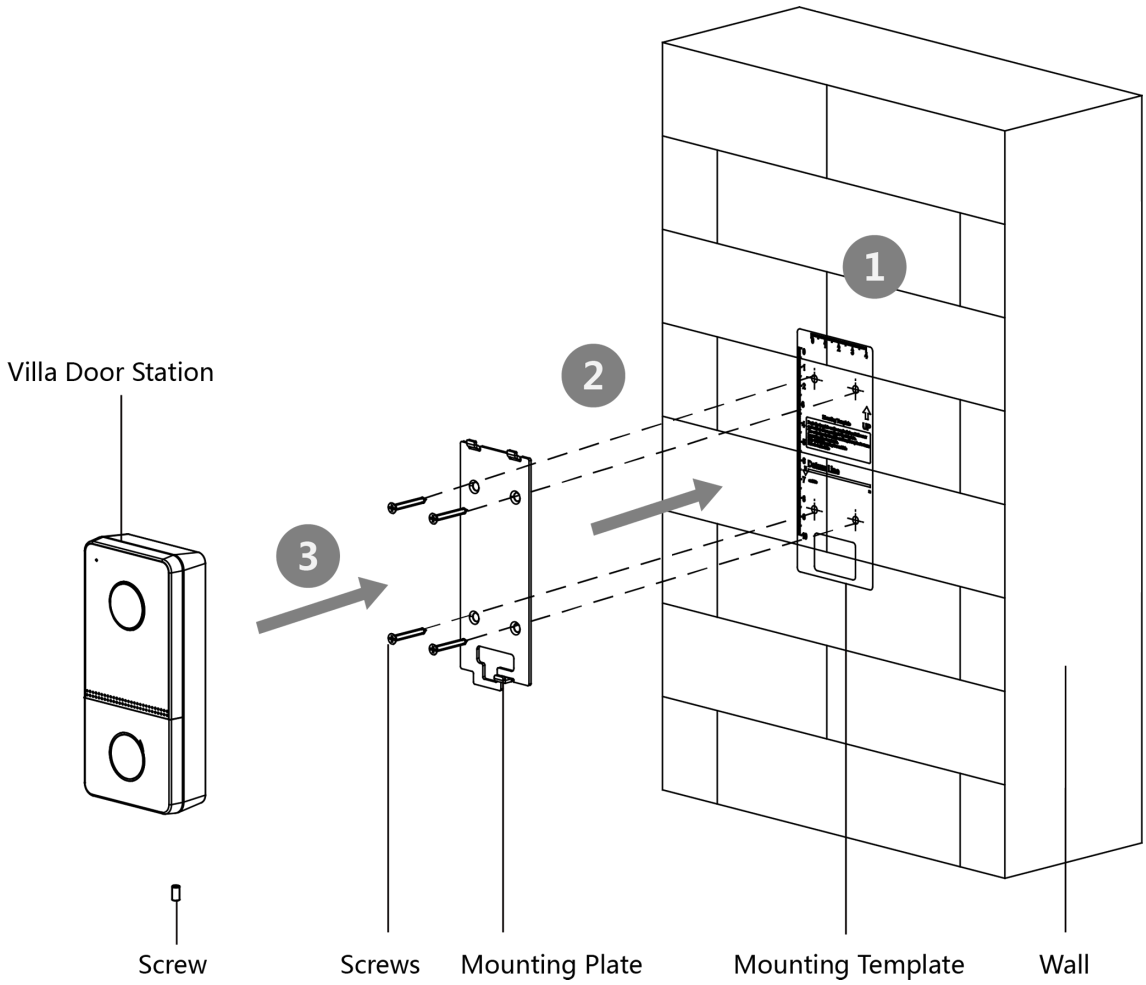

Figure 3-4 Surface Mounting without Protective Shield

3.3 Surface Mounting with Protective Shield

Before You Start

- Tools that you need to prepare for installation: Drill (ø2.846) and gradienter.
- Purchase the protective shield before installation.
- If installing outdoors, you are advised to install the device with protective shield.

Steps

1. Stick the mounting template on the wall. Drill screw holes according to the mounting template. Remove the template from the wall.

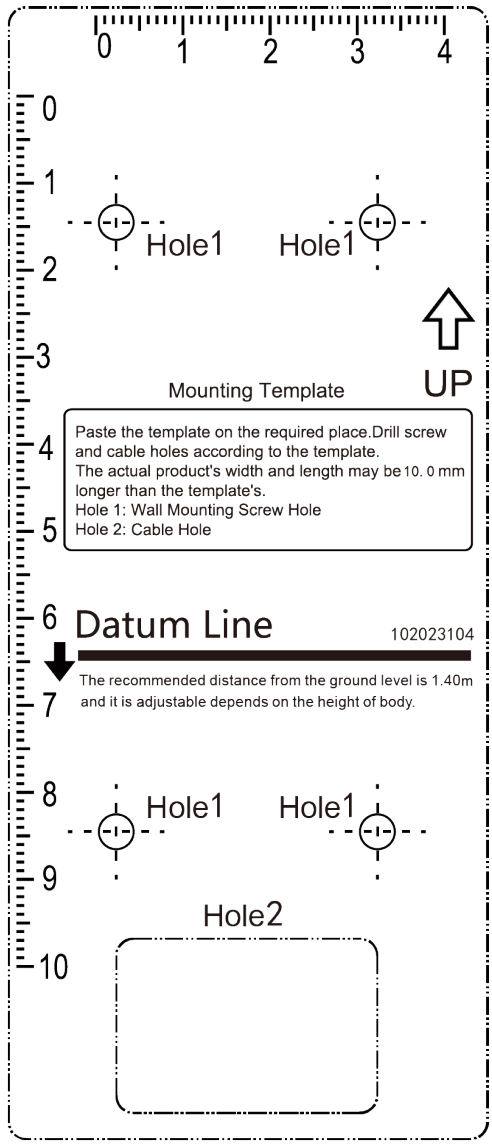

Figure 3-5 Mounting Template

2. Align the protective shield with the mounting template.
3. Secure the mounting plate and protective shield on the wall with 4 supplied screws according to the screw holes.
4. Install the villa door station to the mounting plate. Fix the device on the mounting plate with the set screw.

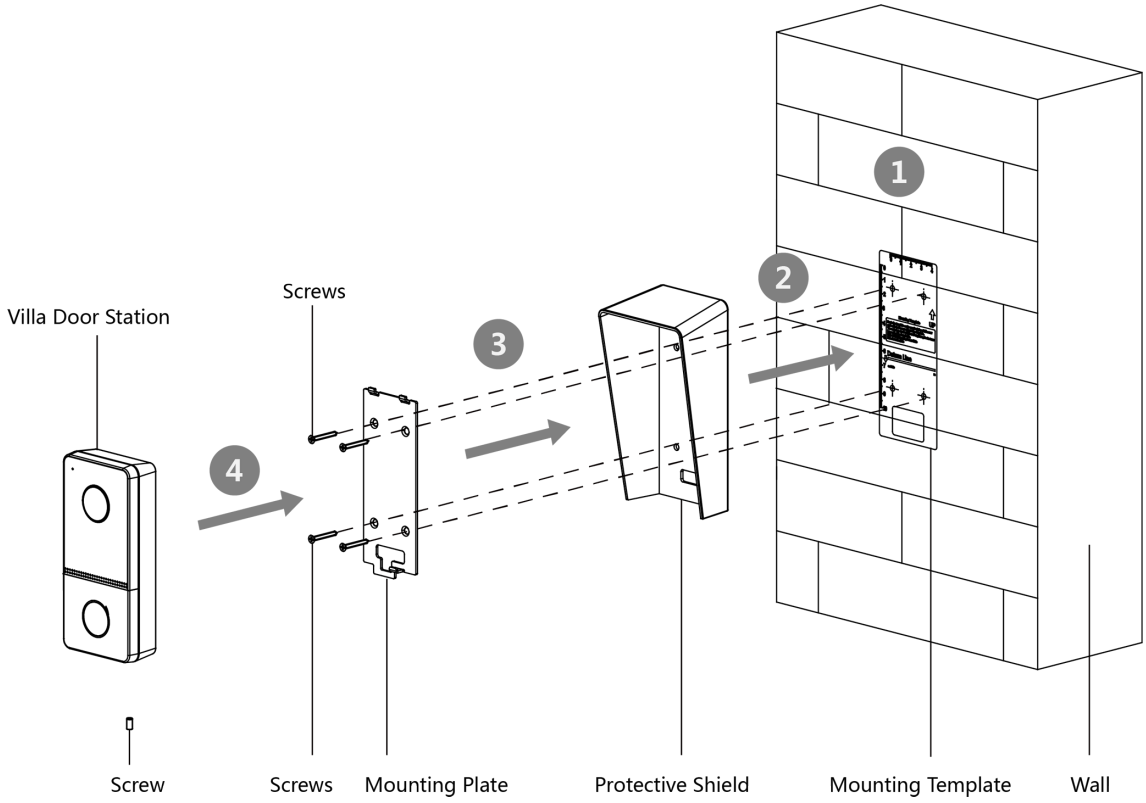

Figure 3-6 Surface Mounting with Protective Shield

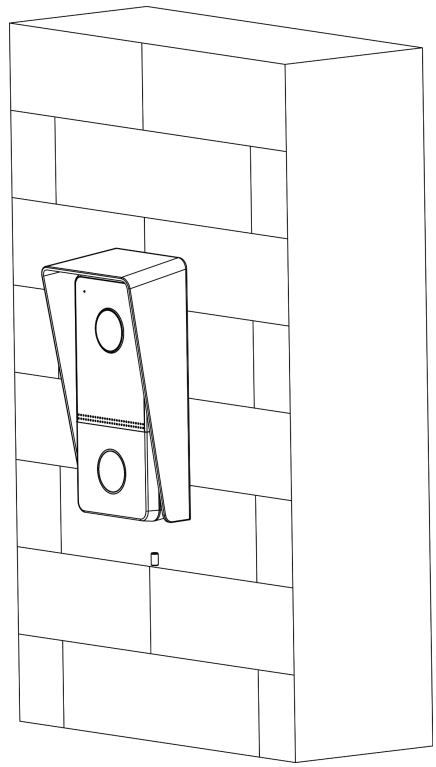

Figure 3-7 Finished View

Chapter 4 Activation

4.1 Activate via SADP

SADP is a tool to detect, activate and modify the IP address of the device over the LAN.

Before You Start

- Get the SADP software from the supplied disk or the official website ***http://www.hikvision.com/en/*** , and install the SADP according to the prompts.
- The device and the PC that runs the SADP tool should be within the same subnet.

The following steps show how to activate a device and modify its IP address. For batch activation and IP addresses modification, refer to *User Manual of SADP* for details.

Steps

1. Run the SADP software and search the online devices.
2. Find and select your device in online device list.
3. Input new password (admin password) and confirm the password.

Caution

STRONG PASSWORD RECOMMENDED-We highly recommend you create a strong password of your own choosing (using a minimum of 8 characters, including upper case letters, lower case letters, numbers, and special characters) in order to increase the security of your product. And we recommend you reset your password regularly, especially in the high security system, resetting the password monthly or weekly can better protect your product.

Note

Characters containing admin and nimda are not supported to be set as activation password.

4. Click **Activate** to start activation.

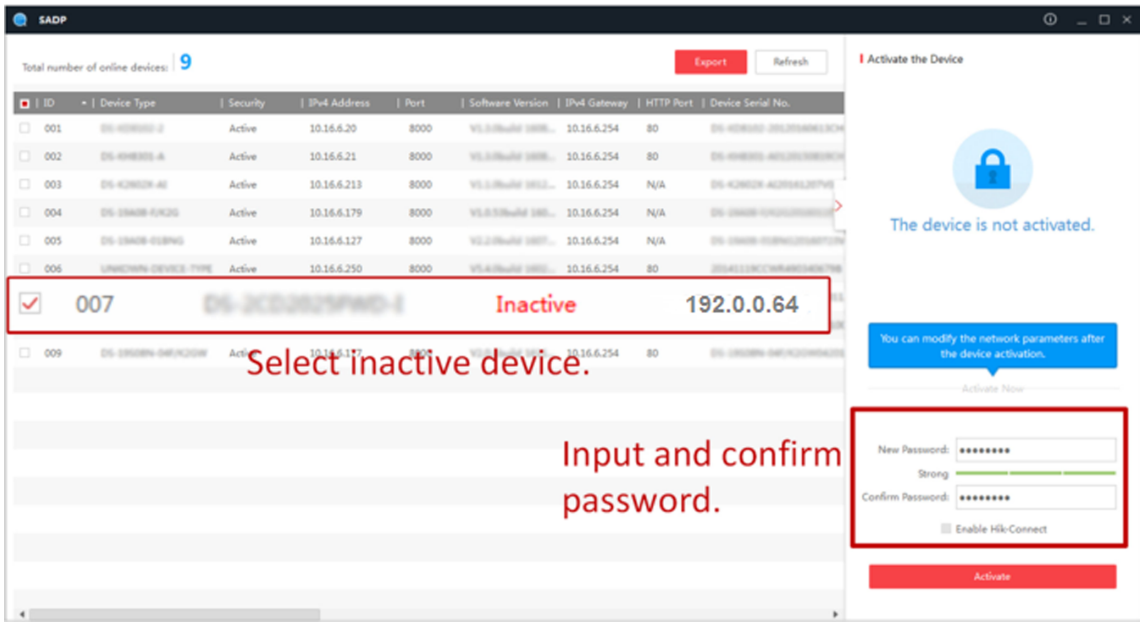

Status of the device becomes **Active** after successful activation.

5. Modify IP address of the device.
   1) Select the device.
   2) Change the device IP address to the same subnet as your computer by either modifying the IP address manually or checking **Enable DHCP**.
   3) Input the admin password and click **Modify** to activate your IP address modification.

4.2 Activate via Web Browser

You can activate the device via the web browser.

Steps

1. Enter the device default IP address (192.0.0.65) in the address bar of the web browser, and press **Enter**.

   Note

   Make sure the device IP address and the computer's should be in the same IP segment.

2. Create a new password (admin password) and confirm the password.

   Note

   - The password should be 8 to 16 characters.
   - The password should contain at least 2 of the following types: digits, lowercase letters, uppercase letters and special characters.
   - The username cannot be the same as the password. Password cannot be inverted write of user name.

- The password strength of the device can be automatically checked. In order to increase the security of your product, we highly recommend you change the password of your own choosing. And we recommend you change your password regularly, especially in the high security system, changing the password monthly or weekly can better protect your product. Proper configuration of all passwords and other security settings is the responsibility of the service provider and/or end-user.
- Proper configuration of all passwords and other security settings is the responsibility of the service provider and/or end-user.

3. Click **Activate**.
4. Edit the device IP address. You can edit the IP address via the SADP tool, the device, and the client software.

4.3 Activate Device via Client Software

You can only configure and operate the door station after creating a password for the device activation.

Default parameters of door station are as follows:

- Default IP Address: 192.0.0.65.
- Default Port No.: 8000.
- Default User Name: admin.

Steps

1. Run the client software, click **Maintenance and Management → Device Management → Device** to enter the page.
2. Click **Online Device**.
3. Select an inactivated device and click **Activate**.
4. Create a password, and confirm the password.

Note

We highly recommend you to create a strong password of your own choosing (using a minimum of 8 characters, including at least three kinds of following categories: upper case letters, lower case letters, numbers, and special characters) in order to increase the security of your product. And we recommend you change your password regularly, especially in the high security system, changing the password monthly or weekly can better protect your product.

5. Click **OK** to activate the device.

Note

- When the device is not activated, the basic operation and remote operation of device cannot be performed.
- You can hold the **Ctrl** or **Shift** key to select multiple devices in the online devices, and click the **Activate** button to activate devices in batch.

4.3.1 Edit Network Parameters

To operate and configure the device via LAN (Local Area Network), you need connect the device in the same subnet with your PC. You can edit network parameters via **iVMS-4200** client software.

Steps

1. Select an online activated device and click the **Modify Netinfo**.
2. Edit the device IP address and gateway address to the same subnet with your computer.
3. Enter the password and click **OK** to save the network parameters modification.

Note

- The default port No. is 8000.
- The default IP address of the door station is 192.0.0.65.
- After editing the network parameters of device, you should add the devices to the device list again.

Chapter 5 Quick Operation via Web Browser

5.1 Select Language

You can select a language for the device system.

Click in the top right of the web page to enter the **Device Language Settings** page. You can select a language for the device system from the drop-down list.

By default, the system language is English.

Note

After you change the system language, the device will reboot automatically.
During the whole process, you can click Exit in the top right of the web page to exit the page at any time.

5.2 Time Settings

Click in the top right of the web page to enter the wizard page.

Time Zone

Select the device located time zone from the drop-down list.

Time Sync.

NTP

You should set the NTP server's IP address, port No., and interval.

Manual

By default, the device time should be synchronized manually. You can set the device time manually or check **Sync. with Computer Time** to synchronize the device time with the computer's time.

Server Address/NTP Port/Interval

You can set the server address, NTP port, and interval.

DST

You can view the DST start time, end time and bias time.

5.3 Privacy Settings

Set the picture uploading and storage parameters.

Click on the top right of the web page to enter the wizard page. After previous settings, you can click **Next** to enter the **Privacy Settings** page.

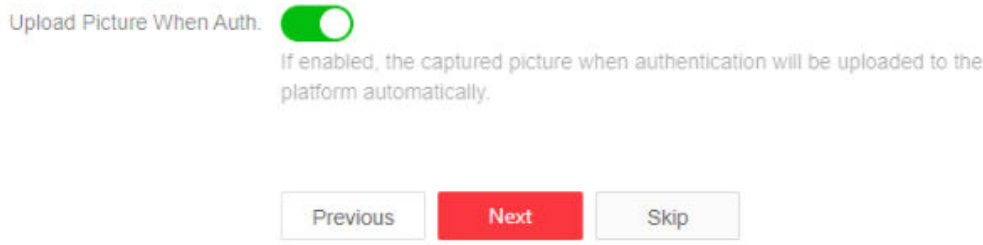

Figure 5-1 Privacy Settings

Upload Picture When Auth.

Upload the pictures when authenticating to the platform automatically.

Click **Next** to save the settings and go to the next parameters. Or click **Skip** to skip privacy settings.

5.4 Administrator Settings

Steps

1. Click in the top right of the web page to enter the wizard page. After previous settings, you can click **Next** to enter the **Administrator Settings** page.
2. Enter the employee ID and name of the administrator.
3. Click **Add Card** to enter the Card No. and select the property of the card.

   Note

   Up to 5 cards can be supported.
4. Click **Complete** to complete the settings.

5.5 No. and System Network

Steps

1. Click in the top right of the web page to enter the wizard page. After previous settings, you can click **Next** to enter the **No. and Network System Network** settings page.
2. Set the device type.

   Note

   If set the device type as **Door Station**, you can set the**Community No.**, **Building No.**, **Unit No.**, **Floor No.** and **Door Station No.**.

   Device Type

   The device can be used as a door station or doorphone. Select a device type from the drop-down list.

Community No.

Set the device community No.

Building No.

Set the device building No.

Unit No.

Set the device unit No.

Floor No.

Set the device installed floor No.

Door Station No.

Set the device installed door station No.

Note

The main door station No. is 0, and the sub door station No. ranges from 1 to 99.

3. Set the video intercom network parameters.

Note

The device type is selected as **Door Station** by default. If you select another type, you can reboot device and go to **Configuration → Intercom** for intercom settings.

Registration Password

Set the registration password of the main station for communication. Set the registration password of the main station for communication.

Main Station IP

Enter the main station's IP address that used for communication.

Private Server IP

Refers to the SIP server IP. Enter the main station’s IP address that used for communication. At this time the main station is used as a SIP server. Other intercom devices should registered to this server address to realize communication.

Enable Protocol 1.0

If enabled, the door station can be registered to the main station by old protocol version. If disabled, the door station can be registered to the main station by new protocol version.

4. Click **Complete** to save the settings after the configuration.

Chapter 6 Operation via Web Browser

6.1 Login

You can login via the web browser or the remote configuration of the client software.

Note

Make sure the device is activated.

Login via Web Browser

Enter the device IP address in the address bar of the web browser and press **Enter** to enter the login page.
Enter the device user name and the password. Click **Login**.

Login via Remote Configuration of Client Software

Download and open the client software. After adding the device, click to enter the Configuration page.

6.2 Forget Password

If you forget the password when logging in, you can change the password by email address or security questions.

Note

The function is supported when the PC/mobile phone is in the same network segment with the device.

On the login page, click **Forget Password**.

Select **Verification Mode**.

Security Question Verification

Answer the security questions.

E-mail Verification

1. Export the QR code and send it to ***pw_recovery@hikvision.com*** as attachment.
2. You will receive a verification code within 5 minutes in your reserved email.
3. Enter the verification code into the verification code field to verify your identification.

Click **Next**, create a new password and confirm it.

6.3 Overview

You can view the live video of the device, real-time event, linked devices, person information, network status, basic information, and device capacity.

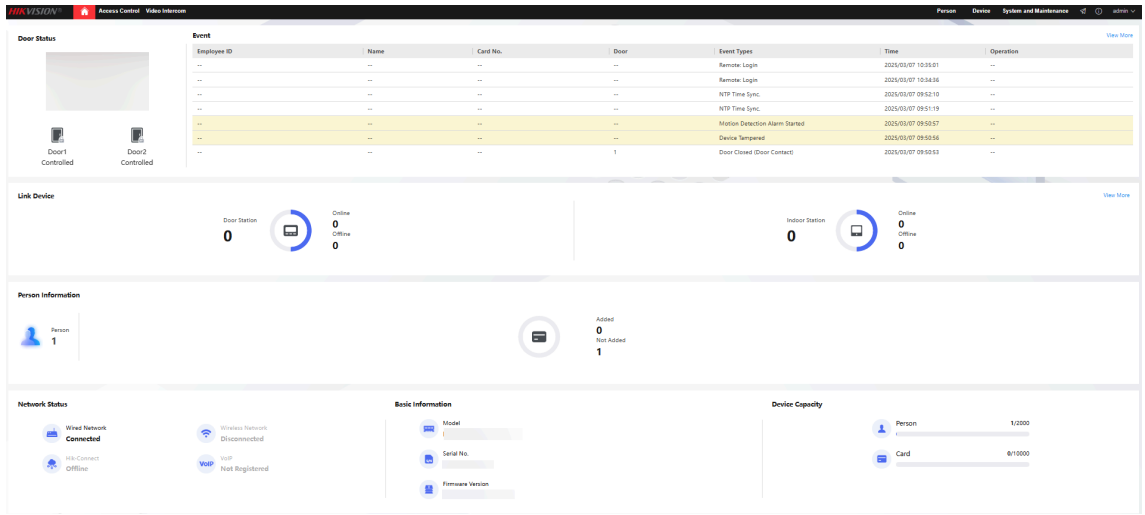

Figure 6-1 Overview Page

Function Descriptions:

Door Status

Click to view the device live view.

Set the volume when starting live view.

Note

If you adjust the volume when starting two-way audio, you may hear a repeated sounds.

You can capture image when starting live view.

Select the streaming type when starting live view. You can select from the main stream and the sub stream.

Full screen view.

/ / /

The door status is open/closed/remaining open/remaining closed.

Controlled Status

You can select open/closed/remaining open/remaining closed status according to your actual needs.

Real-Time Event

You can view the event Employee ID, Name, Card No., Event Type, Time, and Operation. You can also click **View More** to enter the search conditions, including the event type, employee ID, the name, the card No., the time, the unit. Click **Search**. The results will be displayed on the right panel.

Person Information

You can view the added and not added information of person face, fingerprint and card.

Network Status

You can view the connected and registered status of wired network, VoIP and cloud service.

Basic Information

You can view the model, serial No. and firmware version.

Device Capacity

You can view the Person, Card, and Event capacity.

6.4 Person Management

Click **Add** to add the person's information, including the basic information, certificate, authentication and settings.

Add Basic Information

Click **Person → +Add** to enter the Add Person page.
Add the person's basic information, including the employee ID, the person's name, floor No., room No., etc.
Click **Save** to save the settings.

Set Validity Period

Click **Person → +Add** to enter the Add Person page.
Enable **Long-Term Effective User**, or set **Start Time** and **End Time** and the person can only has the permission within the configured time period according to your actual needs.
Click **Save** to save the settings.

Authentication Settings

Click **Person → +Add** to enter the Add Person page.
Set the authentication type. You can choose from cards and pin configuration.
Click **Add** to add the person. Or you can click **Save and Continue** to add the next person.

Add Card

Click **Person → +Add** to enter the Add Person page.

Click **+ Add Card**, enter the **Card No.** and select the **Property**, and click **OK** to add the card.

Note

Up to 5 cards can be added.

Generate PIN

Click **Person → +Add** to enter the Add Person page.
You can click **Auto Generate** to get a random pin.

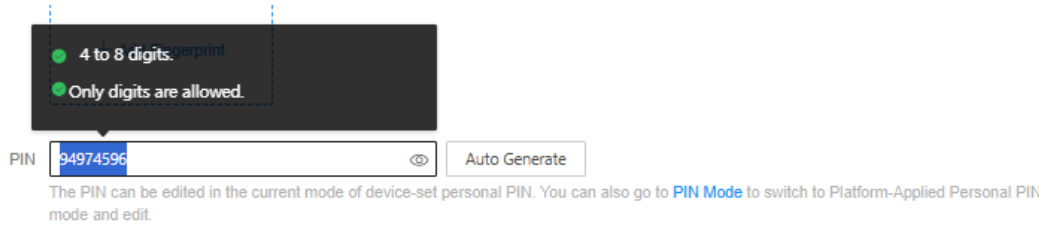

Figure 6-2 PIN

Click **Add** to add the person. Or you can click **Save and Continue** to add the next person.

Set Door Permission

You can add schedule and door permission for each person.

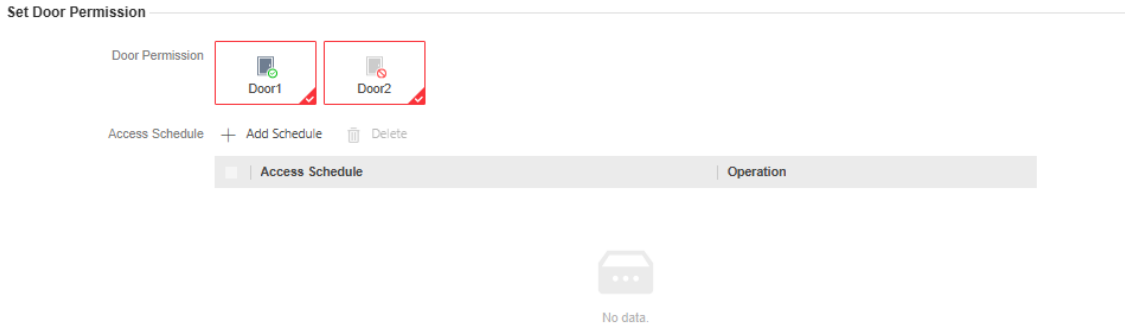

Note

Just select an access schedule from your saved template and click **OK**.

Click **Add** to add the person. Or you can click **Save and Continue** to add the next person.

6.5 Search Event

Click **Event Search** to enter the Search page.

Select event types, major type and sub type. Enter the search conditions, including the employee ID, the name, the card No., the start time, and the end time, and click **Search**.

The results will be displayed on the right panel.

6.6 Device Management

You can manage the linked device on the page.

Click **Device Management** to enter the settings page.

Figure 6-3 Device Management

Add Device

- Click **Add** to add the indoor station or sub door station. Enter the parameters and click **OK** to add.
- Click **Import**. Enter the information of the device in the template to import devices in batch.

Export

Click **Export** to export the information to the PC.

Delete

Select the device and click **Delete** to remove the selected device from the list.

Refresh

Click **Refresh** to get the device information.

Synchronize

Click **Synchronize**, enable **synchronize** and click **OK** to synchronize parameters for activated devices.

Note

After enabling Sync. Parameters, activated devices will synchronize parameters. Inactivated devices will synchronize parameters whether enableing Sync. Parameters or not.

Optional: Set Device Information.

- Click to edit device information.
- Click to delete device information from the list.
- Select **Status** and **Device Type** to search devices.

6.7 Configuration

6.7.1 View Device Information via PC Web

View the device name, device No., language, model, serial No., version, number of channels, IO input, IO output, lock, alarm input, alarm output, and device capacity, etc.

Click **System and Maintenance → System Configuration → System → System Settings → Basic Information** to enter the configuration page.

You can view the device name, device No., language, model, serial No., version, number of channels, IO input, IO output, lock, alarm input, alarm output, and device capacity, etc.

Click **Upgrade** in the Firmware Version, you can go to the upgrade page to upgrade the device.

6.7.2 Set Time

Set the device's time zone, synchronization mode, server address, NTP port, and interval.

Click **System and Maintenance → System Configuration → System → System Settings → Time Settings** .

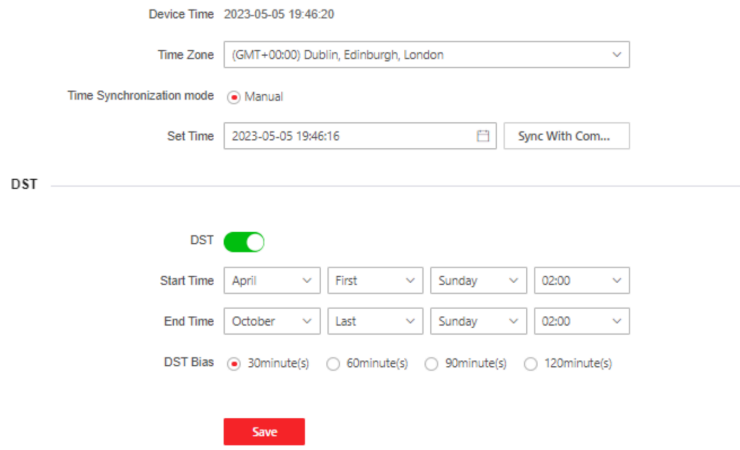

Figure 6-4 Time Settings

Click **Save** to save the settings after the configuration.

Time Zone

Select the device located time zone from the drop-down list.

Time Sync.

NTP

You should set the NTP server's IP address, port No., and interval.

Manual

By default, the device time should be synchronized manually. You can set the device time manually or check **Sync. with Computer Time** to synchronize the device time with the computer's time.

Server Address Type/Server Address/NTP Port/Interval

You can set the server address type, server address, NTP port, and interval.

6.7.3 Set DST

Steps

1. Click **System Configuration → System → System Settings → Time Settings** .
2. Slide to enable **DST**.
3. Set the DST start time, end time and bias time.
4. Click **Save** to save the settings.

6.7.4 Change Administrator's Password

Steps

1. Click **System and Maintenance → System Configuration → System → User Management → User Management** .
2. Click ✎ .
3. Enter the old password and create a new password.
4. Confirm the new password.
5. Click **Save**.

Note

- The password should be 8 to 16 characters.
- The password should contain at least 2 of the following types: digits, lowercase letters, uppercase letters and special characters.
- The username cannot be the same as the password. Password cannot be inverted write of user name.
- The password strength of the device can be automatically checked. In order to increase the security of your product, we highly recommend you change the password of your own choosing. And we recommend you change your password regularly, especially in the high security system, changing the password monthly or weekly can better protect your product. Proper configuration of all passwords and other security settings is the responsibility of the service provider and/or end-user.
- Proper configuration of all passwords and other security settings is the responsibility of the service provider and/or end-user.

6.7.5 Online Users

The information of users logging into the device is shown.

Go to **System and Maintenance → System Configuration → System → User Management → Online Users** to view the list of online users.

6.7.6 Set Secure Door Control Unit Parameters via PC Web

You can set secure door control unit parameters.

Steps

1. Click **System and Maintenance → System Configuration → Access Configuration → Secure Door Control Unit** .
2. View secure door control unit status.
3. You can enable **Auto Binding**.

Note

If the function is enabled, the connected secure door control unit will be automatically bound to the door station and cannot be used for other door stations.

6.7.7 Set I/O Parameters

You can set I/O Parameters on PC Web.

Steps

1. Click **System and Maintenance → System Configuration → Access Configuration → I/O Settings** .
2. Select Input 3 as **Disable** or **Exit Button**.

Note

Because the device only has one lock. The Input 1 is **Door Status** by default.
Input 2 and 4 is set as **Disable** by default.

3. Select Output 2 as **Disable**, **Mechanical Doorbell** or **Electric Lock**.

Note

The Output 1 is **Electric Lock** by default.

6.7.8 Elevator Control

Steps

1. Click **System and Maintenance → System Configuration → Access Configuration → Elevator Control Parameters** .

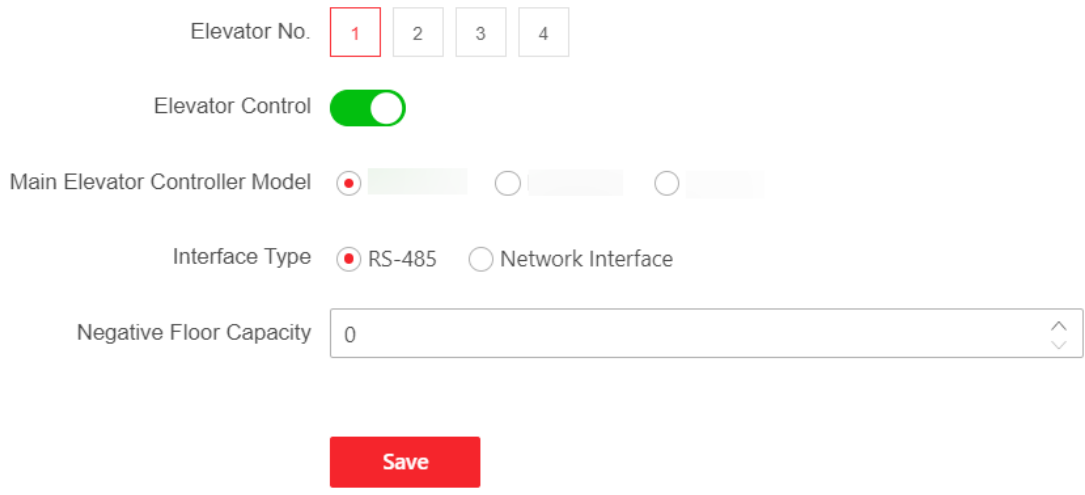

Figure 6-5 Elevator Control

2. Select **Elevator No.**
3. Slide to enable **Elevator Control**.
4. Set the elevator parameters.

Elevator No.

Select an elevator No.

Main Elevator Controller Model

Select an elevator controller.

Interface Type

If you select **RS-485**, make sure you have connected the device to the elevator controller with RS-485 wire.

If you select **Network Interface**, enter the elevator controller's IP address, port No., user name, and password for communication.

Negative Floor Capacity

Set the negative floor number.

Note

- Up to 4 elevator controllers can be connected to 1 device.
- Up to 10 negative floors can be added.
- Make sure the interface types of elevator controllers, which are connected to the same device, are consistent.

6.7.9 View Device Arming/Disarming Information

View device arming type and arming IP address.

Click **System Configuration → System → User Management → Arming/Disarming Information** . You can view the device arming/disarming information. Click **Refresh** to refresh the page.

6.7.10 Network Settings

Set Basic Network Parameters

Click **System and Maintenance → System Configuration → Network → Network Settings → TCP/IP** .

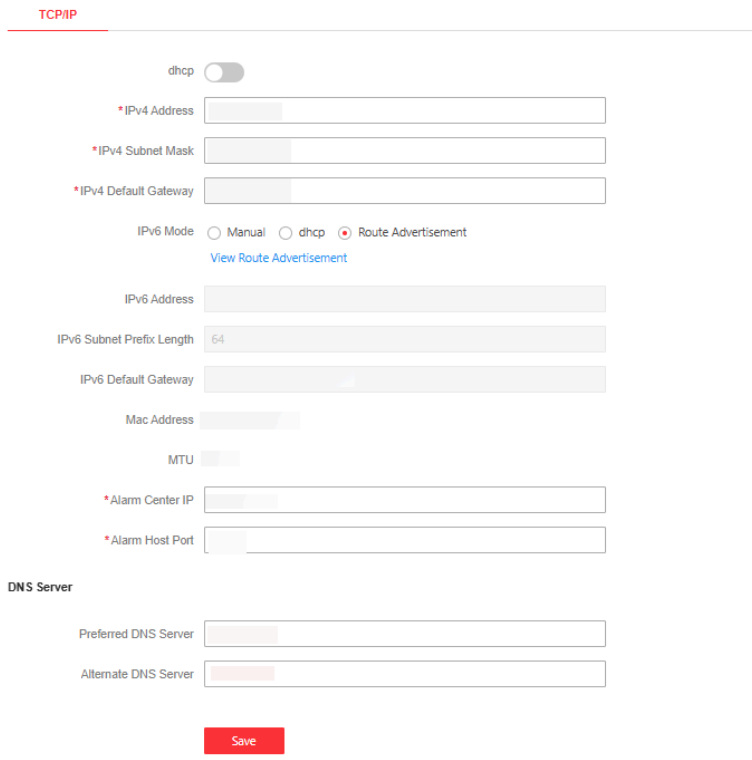

Figure 6-6 TCP/IP Settings

Set the parameters and click **Save** to save the settings.

DHCP

If disable the function, you should set the IPv4 address, IPv4 subnet mask, IPv4 default gateway, preferred DNS server and the Alternate DNS server.

If you check the function, the system will allocate the IPv4 address, IPv4 subnet mask, the IPv4 default gateway, preferred DNS server and the Alternate DNS server automatically.

DNS Server

Set the preferred DNS server and the Alternate DNS server according to your actual need.

IPv6

Three IPv6 modes are available.

Route Advertisement

The IPv6 address is generated by combining the route advertisement and the device Mac address.

Note

Route advertisement mode requires the support from the router that the device is connected to.

DHCP

The IPv6 address is assigned by the server, router, or gateway.

Manual

Enter **IPv6 Address**, **IPv6 Prefix Length**, and **IPv6 Default Gateway**. Consult the network administrator for required information.

Device Hotspot

Only some models support this function.

Steps

1. Click **Network → Network Settings → Device Hotspot** .

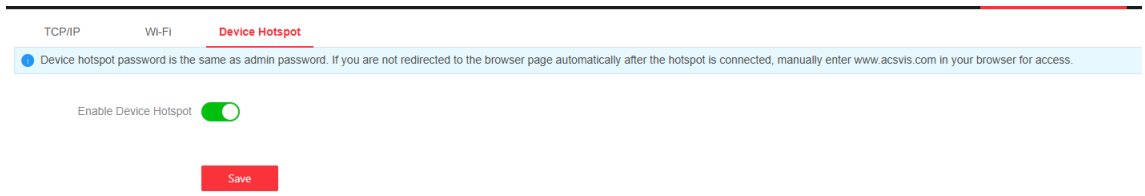

Figure 6-7 Device Hotspot

2. Slide to enable/disable device hotspot.

Note

Device hotspot password is the same as admin password. If you are not redirected to the browser page automatically after the hotspot is connected, manually enter www.acsvis.com in your browser for access.

3. Click **Save**.

Wi-Fi Settings

Some models support Wi-Fi function.

Steps

1. Click **System Configuration → Network → Network Settings → Wi-Fi** to enter the settings page.

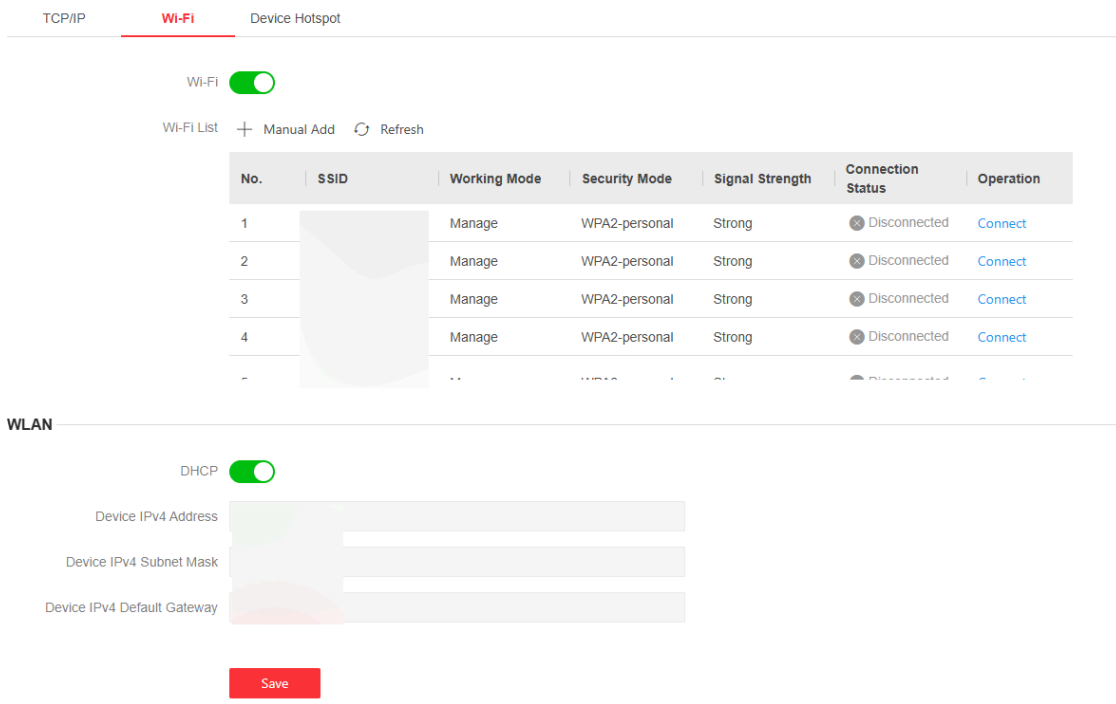

Figure 6-8 Wi-Fi

2. Enable **Wi-Fi**.
3. Click **+ Manual Add**, and set corresponding parameters and **Password** of the Wi-Fi.
   1) Enter the **SSID**.
   2) Select **Security Mode**.
   3) Click **Save**.
   4) **Optional:** Click **Refresh** to get the present information.
4. Click **Connect**.

Set Port Parameters

Set the HTTP, HTTPS, RTSP and Server port parameters.

Click **System Configuration → Network → Network Service → HTTP(S)** .

HTTP

It refers to the port through which the browser accesses the device. For example, when the HTTP Port is modified to 81, you need to enter ***http://192.0.0.65:81*** in the browser for login.

HTTPS

Set the HTTPS for accessing the browser. Certificate is required when accessing.

Click **System Configuration → Network → Network Service → RTSP** .

RTSP

It refers to the port of real-time streaming protocol.

Click **System Configuration → Network → Device Access → SDK Server** .

SDK Server

It refers to the port through which the client adds the device.

Platform Access

Platform access provides you an option to manage the devices via platform.

Steps

1. Click **System Configuration → Network → Device Access → Hik-Connect** to enter the settings page.

   Note

   Hik-Connect is an application for mobile devices. With the App, you can view live image of the device, receive alarm notification and so on.

2. Check **Enable** to enable the function.
3. **Optional:** Check the checkbox of **Custom**, and you can set the server address by yourself.
4. Enter the server IP address, and verification code.

   Note

   6 to 12 letters (a to z, A to Z) or numbers (0 to 9), case sensitive. You are recommended to use a combination of no less than 8 letters or numbers.

5. Enter the verification code.
6. Bind an account.

   Binding via Code: Use the App to scan the QR code at the back of your device to bind the account.

7. Click **Save** to enable the settings.

FTP Settings

You can configure FTP (File Transfer Protocol) parameters.

Steps

1. Click **Network → Network Service → FTP** to enter the settings page.

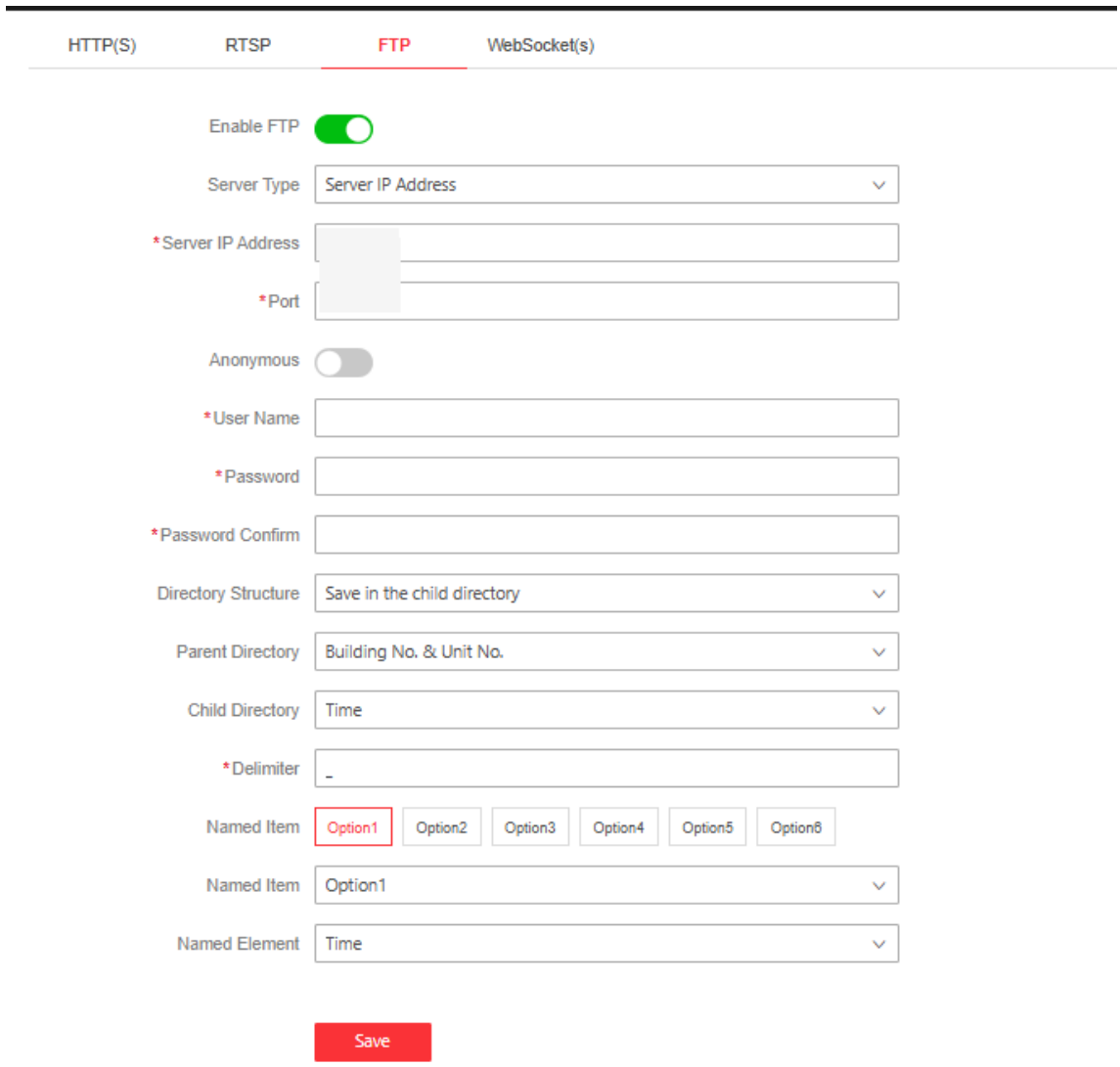

Figure 6-9 FTP Settings

2. Enable**FTP**.
3. Select **Server Type**.
4. Enter **Server IP Address** and **Port**.
5. Configure the FTP Settings, and the user name and password are required for the server login.

Note

If you enable **Anonymous**, you will not need to set user name and password.

6. Set the **Directory Structure**, **Parent Directory** and **Child Directory**.
7. Set naming rules.
8. Click **Save** to enable the settings.

Set VoIP

When the device is deployed on the LAN, penetration service can be enabled to achieve remote device management.

Steps

1. Click **System Configuration → Network → Device Access → VoIP** .
2. Slide to **Enable VoIP Gateway**.
3. Enter **Server IP Address** and **Server Port**.
4. Enter **Register User Name** and **Registration Password**.
5. Set **Expiry Time**. The range is1 to 99 min.
6. Slide to **Enable P2P** according to your actual need.
7. Click **Save**.
8. You can view **Online Status**. Click **Refresh** to view the latest status.

Set WebSocket(s) via PC Web

View WebSocket and WebSockets port.

Go to **System and Maintenance → System Configuration → Network → Network Service → WebSocket(s)** .

View WebSocket and WebSockets port.

6.7.11 Set Video and Audio Parameters

Set the image quality and resolution.

Set Video Parameters

Click **System and Maintenance → System Configuration → Video/Audio → Video** .

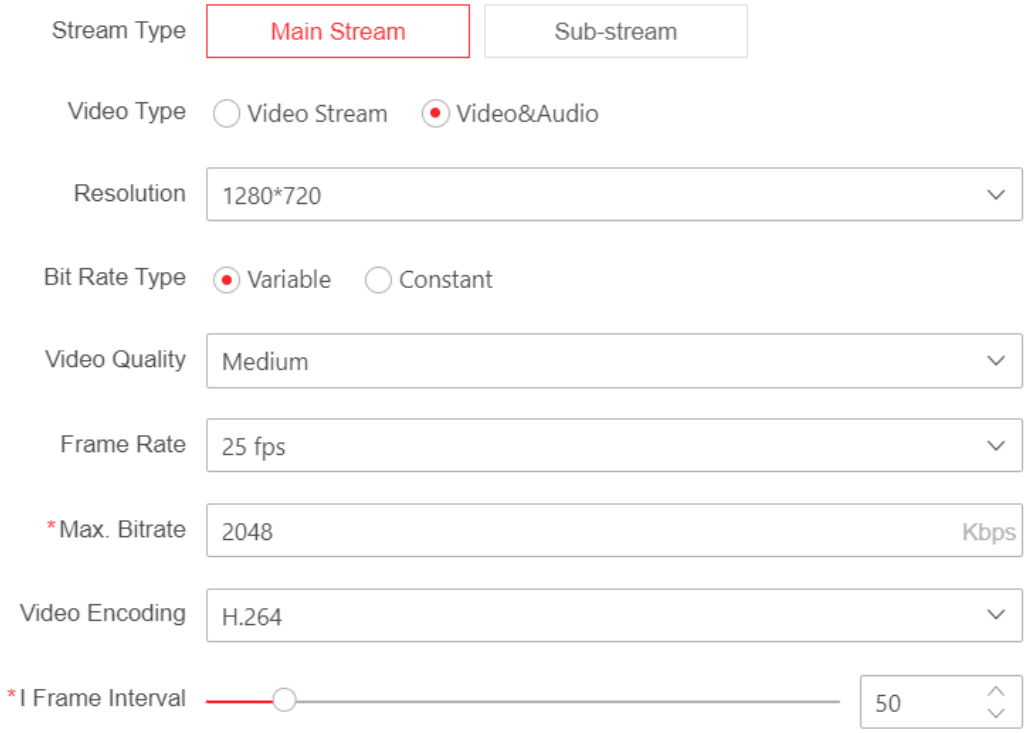

Figure 6-10 Video Settings Page

Set the stream type, the video type, the resolution, the Bit Rate type, the video quality, the frame rate, the Max. bitrate, the video encoding, and I Frame Interval.
Click **Save** to save the settings.

Note

The functions vary according to different models. Refers to the actual device for details.

Set Audio Parameters

Click **System and Maintenance → System Configuration → Video/Audio → Audio** .

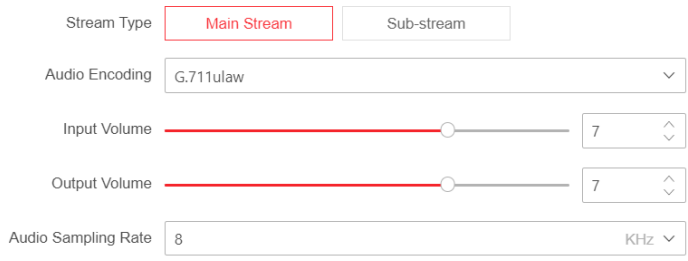

Figure 6-11 Audio Settings Page

Set the stream type, audio encoding, input volume, output volume, speak volume and audio sampling rate.
Slide to enable **Unlocking Sound** according to your actual need.
Check then click **<** or **>** to enable or disable **SIP Audio Encoding**.

Note

You can drag icon ≡ to adjust the order of the encoding.

Click **Save** to save the settings.

6.7.12 Adjust Display Settings

You can adjust image parameters, video parameters, supplement parameters, backlight, beauty etc..

Steps

1. To adjust display settings. Click **System and Maintenance → System Configuration → Image → Display Settings** .
2. Configure the parameters to adjust the image.

   Video Adjustment

   Set the video frame rate when performing live view remotely. After changing the video standard, you should reboot the device to take effect.

   PAL

   25 frames per second. Suitable for mainland China, Hong Kong (China), the Middle East countries, Europe countries, etc.

   NTSC

   30 frames per second. Suitable for the USA, Canada, Japan, Taiwan (China), Korea, the Philippines, etc.

   Image Adjustment

   Drag the block or enter the value to adjust the live video's brightness, contrast, saturation, and sharpness.

   Backlight

   Enable or disable the WDR function.

   When there are both very bright and very dark areas simultaneously in the view, WDR balances the brightness level of the whole image and provide clear images with details.

   Day/Night Switch

   You can choose Day/Night Switch as Auto, Schedule Switch, Night or Daytime mode.

   When choose Day/Night Switch as Auto, you also need to select **Sensitivity** range from 1 to 7.
3. Click **Restore Default Settings** to restore the parameters to the default settings.

OSD Configuration

Steps

1. To adjust display settings. Click **System and Maintenance → System Configuration → Image → OSD Configuration** .
2. **OSD** is enabled by default. You can also slide to disable it.
3. 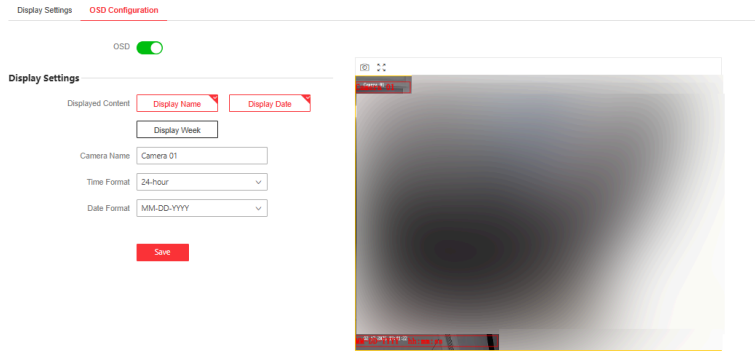

   Click to choose what to display.
4. You can also choose **Time Format** and **Date Format** according to your actual needs.

6.7.13 Event Settings

Set Motion Detection

After enable the function of motion detection, people or stuff enter the configured area will trigger alarm.

Steps

1. Click **System and Maintenance → System Configuration → Event → Event Detection → Motion** .

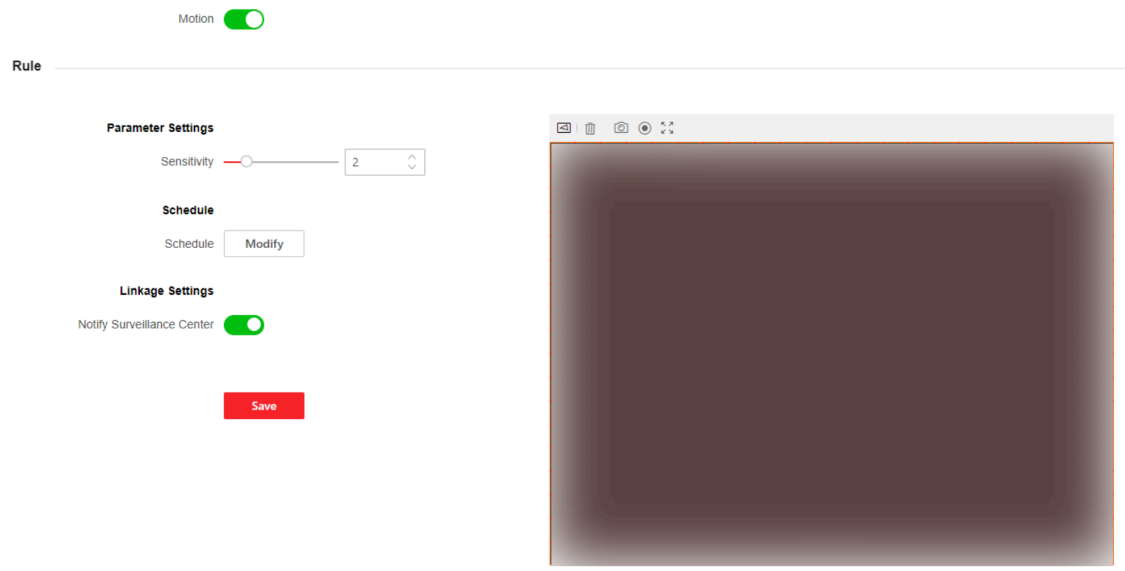

Figure 6-12 Motion Detection

2. Enable **Motion**.
3. Drag the process bar to adjust the **Sensitivity** parameter.
4. Enable **Notify Surveillance Center** according to your actual needs. After enabled, the alarm information is uploaded to the surveillance center when an alarm event is detected.
5. Click **Save**.

Note

The arming schedule is defaulted as all-day.

Linkage Settings

Steps

1. Click **Event → Event Detection → Linkage Settings** to enter the settings page.

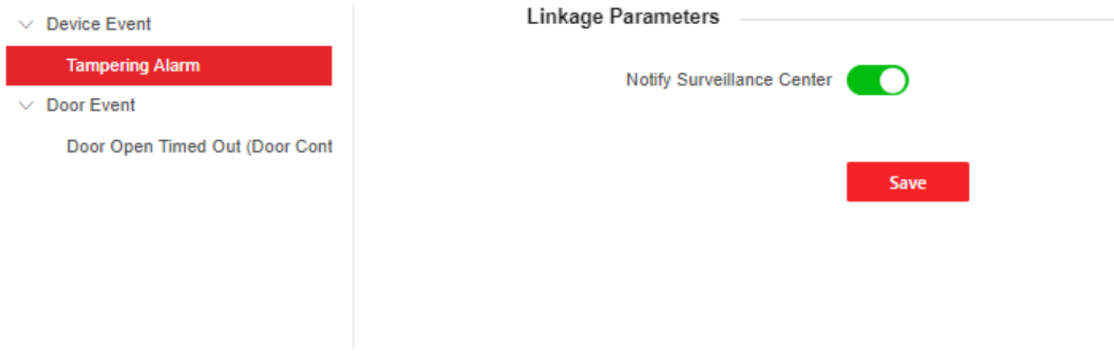

Figure 6-13 Linkage Settings

2. Select event.
   - **Device Event**

     Tampering Alarm
   - **Door Event**

     Door Open Timed Out (Door Contact)
3. Enable **Notify Surveillance Center** according to your actual needs. After enabled, the alarm information is uploaded to the surveillance center when an alarm event is detected.
4. Click **Save** to enable the settings.

6.7.14 Access Control Settings

Set Access Schedule

You can name and add new access template on this page.

Steps

1. Click **Access Control → Time Schedule → Access Schedule** to enter this page.

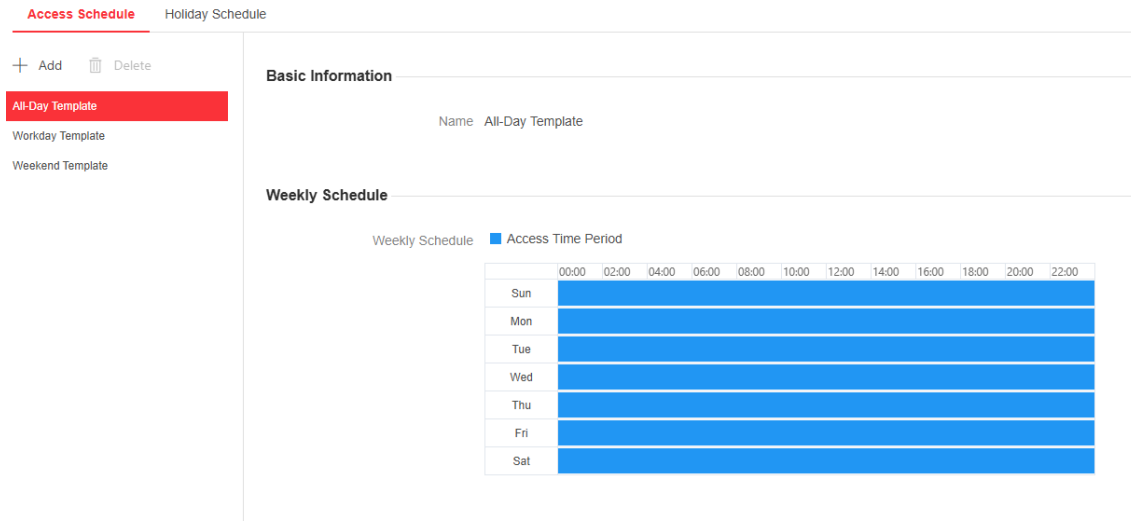

Figure 6-14 Access Schedule

2. Click **+Add**. Then you can edit the name of the schedule.
3. Drag cursor on corresponding timestamp to map valid access period.
4. You can also click **Quick Operation** to apply existing template.
5. **Optional:** Click **Eraser** to adjust chosen time period. You can also click a certain time period then adjust it manually.
6. Click **Save** to save your settings.

Holiday Schedule Template

Set official holidays or specified dates as holidays. The access level of set holidays is higher than the other basic access level.

Steps

1. Click **Access control → Time Schedule → Holiday Schedule → +Add** .

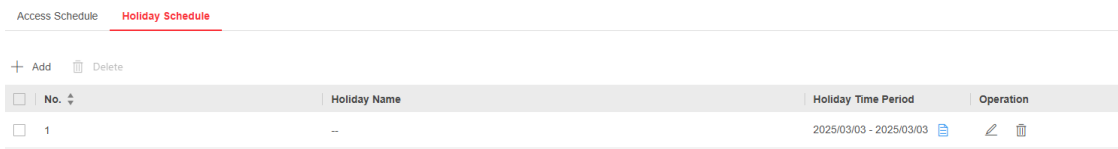

Figure 6-15 Holiday Schedule Template

2. Enter holiday name in the right column.
3. Set Start Date and End Date.
4. Drag cursor on corresponding timestamp to map valid holiday period.
5. **Optional:** Click **Eraser** to adjust chosen time period. You can also click a certain time period then adjust it manually.
6. Click **Save**.

Set Door Parameters

Click **Access Control → Door Parameters** .

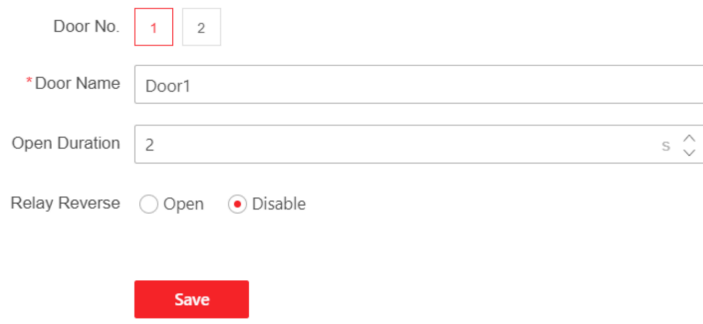

Figure 6-16 Door Parameters Settings Page

Click **Save** to save the settings after the configuration.

Door No.

Select the device corresponded door No.

Door Name

You can create a name for the door.

Open Duration

Set the door unlocking duration. If the door is not opened for the set time, the door will be locked.

Relay Reverse

Set the door unlocking duration. If the door is not opened for the set time, the door will be locked.

Privacy Settings

You should set the privacy parameters, including the picture uploading and storage.

Click **Access Control → Privacy Settings** to enter this page.

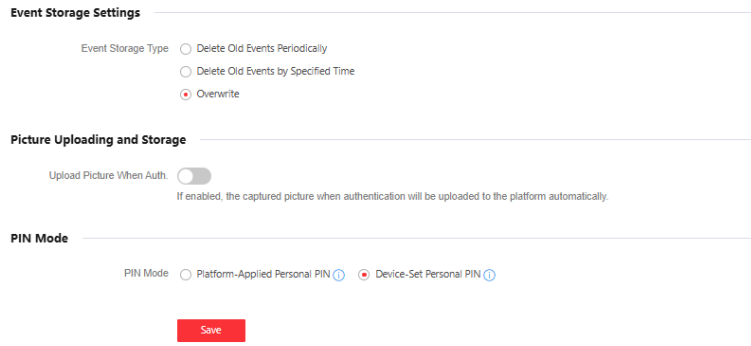

Figure 6-17 Privacy Settings

Upload Pic. When Auth. (Upload Captured Picture When Authenticating)

Upload the pictures captured when authenticating to the platform automatically.

Platform-Applied Personal PIN

You can create the person PIN on the platform. You should apply the PIN to the device. You cannot create or edit the PIN on the device or PC Web.

Device-Set Personal PIN

You can create or edit the PIN on the device or PC Web. You cannot set the PIN on the platform.

Tap **Save** to complete the settings.

Event Storage Settings

Select a method to delete the event. You can select from **Delete Old Events Periodically**, **Delete Old Events by Specified Time**, or **Overwriting**.

Delete Old Events Periodically

Drag the block or enter number to set the period for event deleting. All events will be deleted according to the configured time duration.

Delete Old Events by Specified Time

Set a time and all events will be deleted on the configured time.

Overwriting

The earliest 5% events will be deleted when the system detects the stored events has been over 95% of the full space.

Card Settings

Choose card types to enable..

Go to **Access Control → Access Control → Card Settings** .

Slide to enable card types and click **Save** to save the settings.

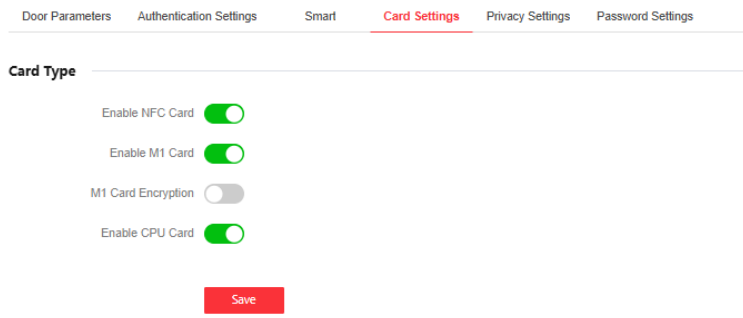

Figure 6-18 Card Type

Enable NFC Card

Enable the function and you can present the NFC card to authenticate. In order to prevent the mobile phone from getting the data of the access control, you can disable NFC card to increase the security level of the data.

Note

Disable NFC card cannot completely avoid presenting NFC card.

Enable M1 Card

Enable M1 card and authenticating by presenting M1 card is available

M1 Card Encryption

M1 card encryption can improve the security level of authentication.

Enable CPU Card

Enable CPU card and authenticating by presenting CPU card is available.

6.7.15 Call Settings

Device No. Settings

Steps

1. Click **Video Intercom → Device No.** to enter the page.

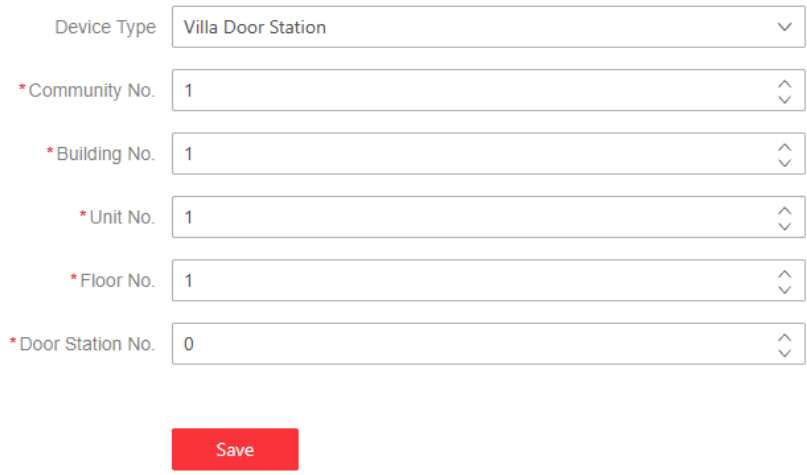

Figure 6-19 Device No. Settings

2. Select the device type from the drop-down list.
3. If select the device type as **Villa Door Station**, you need to set the corresponding information including **Building No.**, **Floor No.**, **Door Station No.**, **Community No.** and **Unit No.**
4. If select the device type as **Doorphone**. You only need to set **Building No.**, **Community No.** and **Unit No.**.
5. Click **Save** to enable the device number configuration.

Linked Network Settings

Steps

1. Click **Intercom → Video Intercom Network** to enter the settings page.

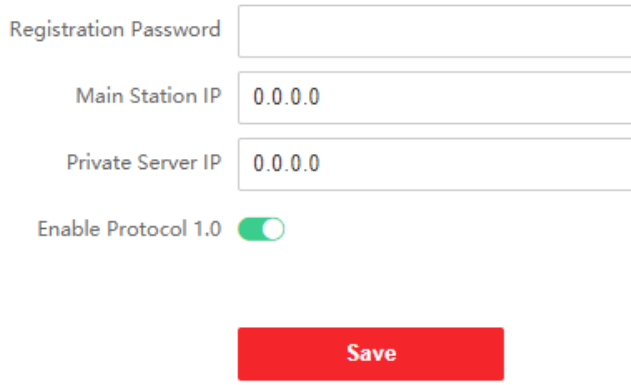

Figure 6-20 Session Settings

2. Set **Registration Password**.
3. Set **Main Station IP** and **Video Intercom Server IP**.

4. Enable Protocol 1.0.
5. Click **Save** to enable the settings.

Time Duration Settings

Set the Max. call duration.

Go to **Video Intercom → Call Paramters → Call Settings** .

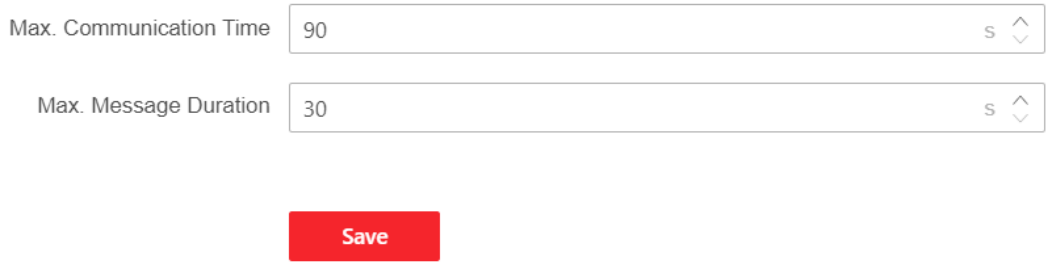

Figure 6-21 Call Settings

Set the **Max. Communication Time** and **Max. Message Duration**. Click **Save**.

Note

- The Max. communication time range is 90 s to 1800 s.
- The Max. message duration range is 30 s to 60 s.

Ringbacktone Settings

Steps

1. Click **Video Intercom → Call Parameters → Ringbacktone Settings** to enter the settings page.
2. Click to import new ringtone.

Note

The supported audio file type for importing is .wav. The file should be less than 800 KB.

Press Button to Call

Steps

1. Click **Video Intercom → Call Parameters → Press Button to Call** to enter the settings page.
2. Fill in the room No. of the indoor station in the blank of the Button Setting column.
3. Link Time Schedule: Select time schedule plan from the drop-down list. For more information about the time schedule plan,

4. Click **Save** to enable the settings.

Call Priority

Steps

1. Click **Intercom → Call Priority** to enter the settings page.

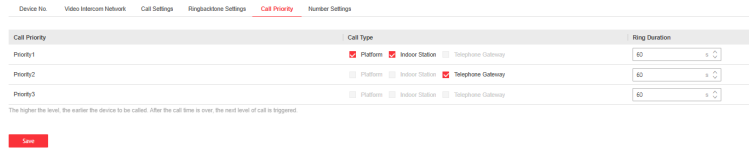

Figure 6-22 Call Priority

2. Check the **Call Type** and set the **Ring Duration** of each 3 priorities.
3. Click **Save** to enable the settings.

Note

The higher the level, the ealier the device to be called. After the call time is over, the next level of call is triggered.

Number Settings

Link the room No. and SIP numbers.

Click **Video Interom → Call Parameters → Number Settings** to enter the page.

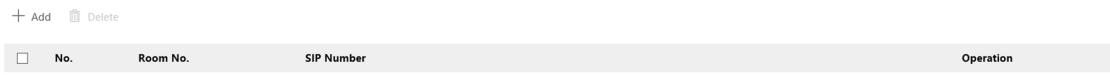

Figure 6-23 Number Settings

Click **+Add**, and set the **Room No.** and SIP numbers in the pop-up dialog box.

Click **Save** to save the settings.

6.8 Maintenance and Security

6.8.1 Upgrade and Maintenance

Reboot device, restore device parameters, and upgrade device version.

Reboot Device

Click **System and Maintenance → Maintenance → Restart** .
Click **Restart** to reboot the device.

Upgrade

Click **System and Maintenance → Maintenance → Upgrade** .
Select an upgrade type from the drop-down list. Click and select the upgrade file from your local PC. Click **Upgrade** to start upgrading.
If the device has been connected to Hik-Connect and network, when there is a new installation package in Hik-Connect, you can click **Upgrade** after Online Update to upgrade the device system.

Note

Do not power off during the upgrading.

Sub Device Upgrade

Click **System and Maintenance → Maintenance → Upgrade** .
Set Upgrade Settings as **RS-485 Card Reader**, and select a card reader.
Select an upgrade type from the drop-down list. Click and select the upgrade file from your local PC. Click **Upgrade** to start upgrading.

Restore Parameters

Click **System and Maintenance → Maintenance → Backup and Reset** .

Restore All

All parameters will be restored to the factory settings. You should activate the device before usage.

Restore

The device will restore to the default settings, except for the device IP address and the user information.

Import and Export Parameters

Click **System and Maintenance → Maintenance → Backup and Reset** .

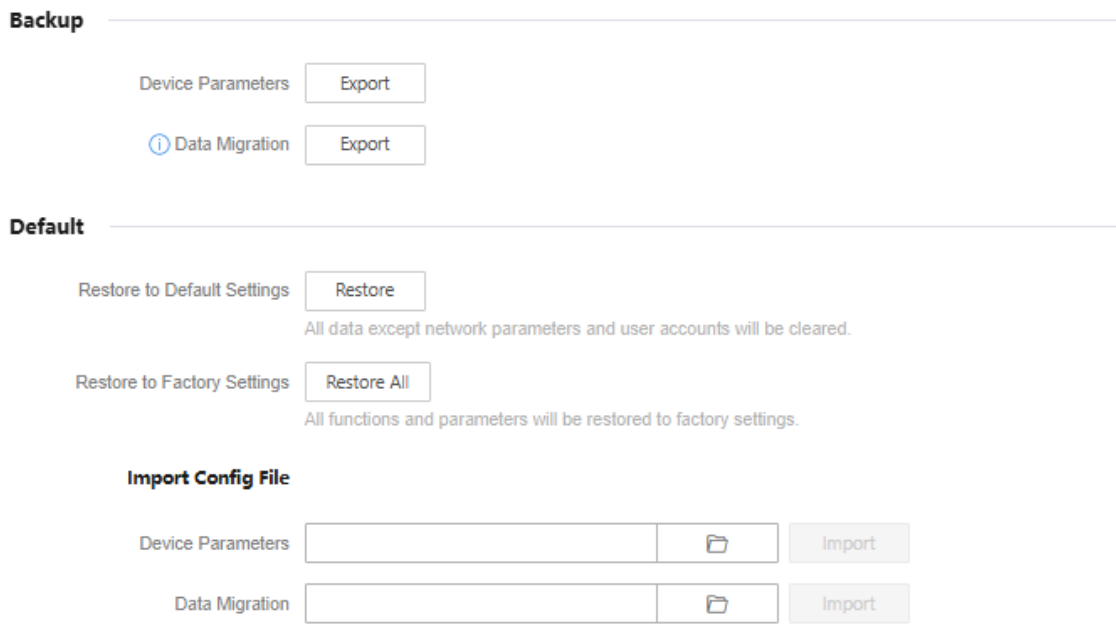

Figure 6-24 Back up and Reset

Device Parameters

Click **Export** to export the device parameters.

Note

You can import the exported device parameters to another device.

Data Migration

Click **Export** to migrate user information and configuration details to other devices.

The information and data include door station configuration data, advertisement information, ringtone and etc.

Import

Click and select the file to import. Click **Import** to start import configuration file.

6.8.2 Device Debugging

You can set device debugging parameters.

Steps

1. Click **System and Maintenance → Maintenance → Device Debugging** .
2. You can set the following parameters.

Enable SSH

To raise network security, disable SSH service. The configuration is only used to debug the device for the professionals.

Print Log

You can click **Export** to export log.

Capture Network Packet

You can set the **Capture Packet Duration**, **Capture Packet Size**, and click **Start** to capture.

6.8.3 View Log via PC Web

You can search and view the device logs.

Go to **System and Maintenance → Maintenance → Log** .

Set the major and minor type of the log type. Set the start time and end time for searching, and click **Search**.

The results will be displayed below, which including the No., time, the major type the minor type, the channel No., the local/remote user information, the remote host IP, etc.

6.8.4 Certificate Management

It helps to manage the server/client certificates and CA certificate.

Note

The function is only supported by certain device models.

Create and Install Self-signed Certificate

Import the certificate that device generated and signed by trusted organization.

Before You Start

Create a self-signed certificate.

Steps

1. Go to **Safe → Certificate Management** .
2. Click **Create Certificate Request** in the **HTTPS Certificate** or **SYSLOG Certificate** module.
3. Input certificate information.
4. Click **Save** to save and install the certificate.

   The created certificate is displayed in the **Certificate Details** area.

   The certificate will be saved automatically.
5. Download the certificate and save it to an asking file in the local computer.
6. Send the asking file to a certification authority for signature.
7. Import the signed certificate.

1) Select a Key in the **Import Key** area, and select a certificate from the local, and click **Import**.
2) Select a certificate type in the **Import Communication Certificate** area, and select a certificate from the local, and click **Import**.

Install Other Authorized Certificate

If you already has an authorized certificate (not created by the device), you can import it to the device directly.

Before You Start
Create a self-signed certificate.

Steps
1. Go to **Safe → Certificate Management** .
2. In the **HTTPS Certificate** and **SYSLOG Certificate** areas, select key and certificate from local PC.
3. Click **Import**.

Install CA Certificate

Before You Start
Prepare a CA certificate in advance.

Steps
1. Go to **Safe → Certificate Management** .
2. In the **Import CA Certificate** in **SYSLOG Certificate** area, create an ID.

   Note
   The input certificate ID cannot be the same as the existing ones.
3. Upload a certificate file from the local.
4. Click **Import**.

Chapter 7 Configuration via Client Software

7.1 Device Management

Device management includes device activation, adding device, editing device, and deleting device, and so on.

After running the iVMS-4200, video intercom devices should be added to the client software for remote configuration and management.

7.1.1 Add Online Device

Before You Start

Make sure the device to be added is in the same subnet with your computer. Otherwise, please edit network parameters first.

Steps

1. Click **Online Device** to select an active online device.
2. Click **Add**.
3. Enter corresponding information, and click **Add**.

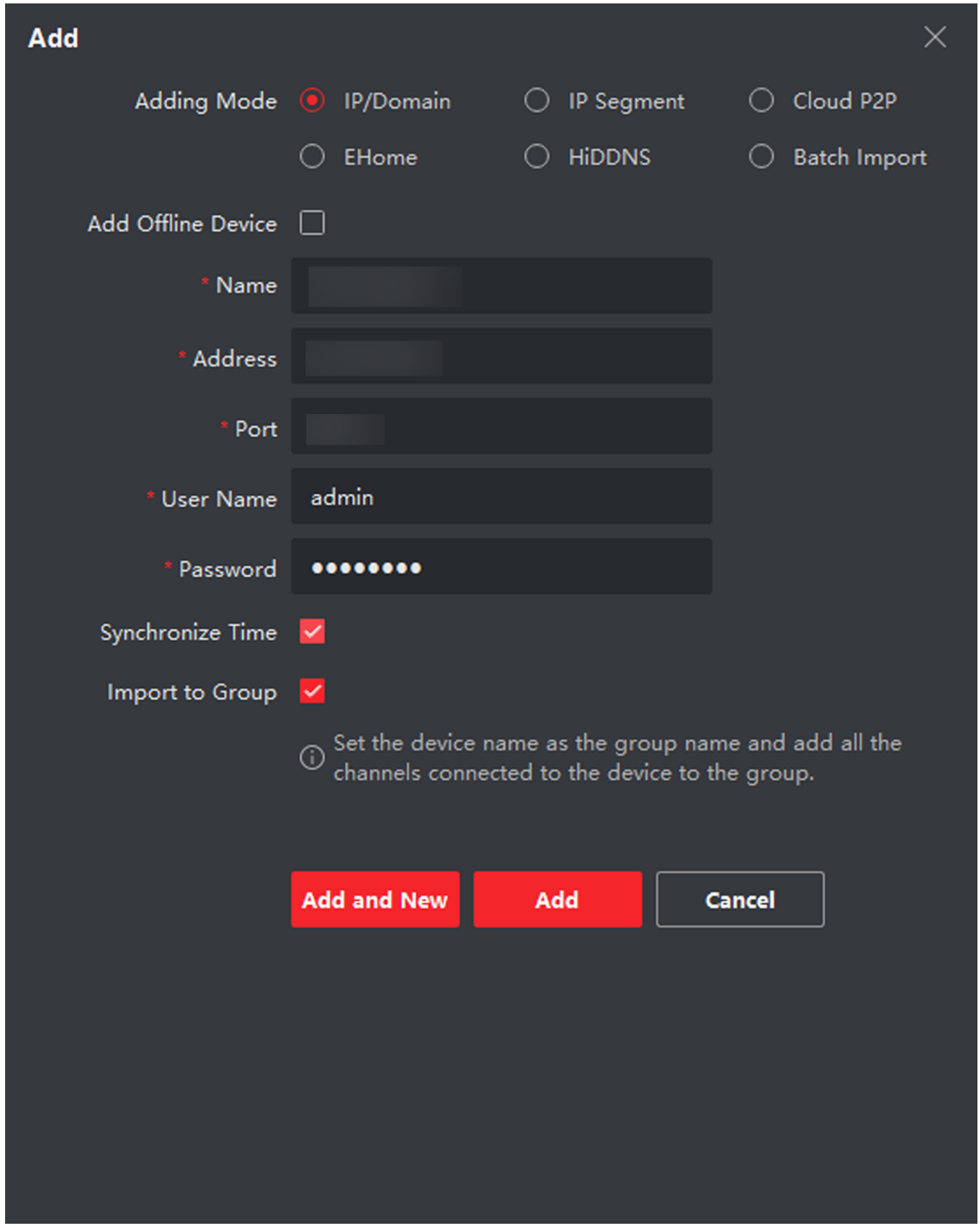

Figure 7-1 Add to the Client

7.1.2 Add Device by IP Address

Steps

1. Click **+Add** to pop up the adding devices dialog box.
2. Select **IP/Domain** as **Adding Mode**.
3. Enter corresponding information.
4. Click **Add**.

7.1.3 Add Device by IP Segment

You can add many devices at once whose IP addresses are among the IP segment.

Steps

1. Click **+Add** to pop up the dialog box.
2. Select **IP Segment** as **Adding Mode**.
3. Enter corresponding information, and click **Add**.

7.2 Live View via Door Station

Steps

1. On the main page of the client software, click **Main View** to enter the Live View page.
2. In the left list of the window, double-click the device IP or click the play icon to live view.
3. **Optional:** On the Live View page, control-click and select **Capture** to get the picture of the live view.

7.3 Organization Management

On the main page of the Client Software, click **PersonalManagement** to enter the configuration page.

7.3.1 Add Organization

Steps

1. In the organization list on the left, click **+Add**.
2. Enter the **Organization Name** as desired.
3. Click **OK** to save the adding.
4. **Optional:** You can add multiple levels of organizations according to the actual needs.
   1) You can add multiple levels of organizations according to the actual needs.
   2) Then the added organization will be the sub-organization of the upper-level organization.

Note

Up to 10 levels of organizations can be created.

7.3.2 Modify and Delete Organization

You can select the added organization and click to modify its name.

You can select an organization, and click **X** button to delete it.

Note

- The lower-level organizations will be deleted as well if you delete an organization.
- Make sure there is no person added under the organization, or the organization cannot be deleted.

7.4 Person Management

After adding the organization, you can add person to the organization and manage the added person such as issuing cards in batch, importing and exporting person's information in batch, etc.

Note

- Up to 2,000 persons can be added.
- Up to 5 cards can be added to each person.

7.4.1 Add Person

Person information is necessary for the video intercom system. And when you set linked device for the person, the intercom between intercom devices can be realized.

Steps

1. Select an organization in the organization list and click **Add** on the Person panel to pop up the adding person dialog.

   Note

   The Person No. will be generated automatically and is editable.

2. Set basic person information.
   1) Enter basic information: name, tel, birthday details, effective period and email address.

      Note

      The length of person name should be less than 15 characters.

   2) Click **Add** face to upload the photo.

Note

The picture should be in *.jpg format.

Click Upload	Select the person picture from the local PC to upload it to the client.
Click Take Phone	Take the person's photo with the PC camera.
Click Remote Collection	Take the person's photo with the collection device.

3. Issue the card for the person.
   1) Click **Credential → Card** .
   2) Click **+** to pop up the Add Card dialog.
   3) Select **Normal Card** as **Card Type**.
   4) Enter the **Card No.**
   5) Click **Read** and the card(s) will be issued to the person.
4. Link the device to the person.
   1) Set the linked devices.

      Linked Device

      You can bind the indoor station to the person.

      Note

      If you select **Analog Indoor Station** in the Linked Device, the **Door Station** field will display and you are required to select the door station to communicate with the analog indoor station.

      Room No.

      You can enter the room No. of the person.
   2) Click **OK** to save the settings.
5. Click **Add** to save the settings.

7.4.2 Modify and Delete Person

Select the person and click **Edit** to open the editing person dialog.

To delete the person, select a person and click **Delete** to delete it.

Note

If a card is issued to the current person, the linkage will be invalid after the person is deleted.

7.4.3 Change Person to Other Organization

You can move the person to another organization if needed.

Steps

1. Select the person in the list and click **Change Organization**.
2. Select the organization to move the person to.
3. Click **OK** to save the settings.

7.4.4 Import and Export Person Information

The person information can be imported and exported in batch.

Steps

1. Exporting Person: You can export the added persons' information in Excel format to the local PC.
   1) After adding the person, you can click **Export Person** to pop up the following dialog.
   2) Click **...** to select the path of saving the exported Excel file.
   3) Check the checkboxes to select the person information to export.
   4) Click **OK** to start exporting.
2. Importing Person: You can import the Excel file with persons information in batch from the local PC.
   1) Click **Import Person**.
   2) You can click **Download Template for Importing Person** to download the template first.
   3) Input the person information to the downloaded template.
   4) Click **...** to select the Excel file with person information.
   5) Click **OK** to start importing.

7.4.5 Get Person Information from Device

If the added device has been configured with person information (including person details, issued card information), you can get the person information from the device and import to the client for further operation.

Steps

Note

This function is only supported by the device the connection mothod of which is TCP/IP when adding the device.

1. In the organization list on the left, click to select an organization to import the persons.
2. Click **Get from Device** to pop up the dialog box.
3. The added device will be displayed.
4. Click to select the device and then click **Get** to start getting the person information from the device.

Note

- The person information, including person details, and the linked card (if configured), will be imported to the selected organization.
- If the person name stored in the device is empty, the person name will be filled with the issued card No. after importing to the client.

7.4.6 Issue Card in Batch

You can issue multiple cards for the person with no card issued in batch.

Steps

1. Click **Batch Issue Cards** to enter the dialog page. All the added person with no card issued will display in the Person(s) with No Card Issued list.

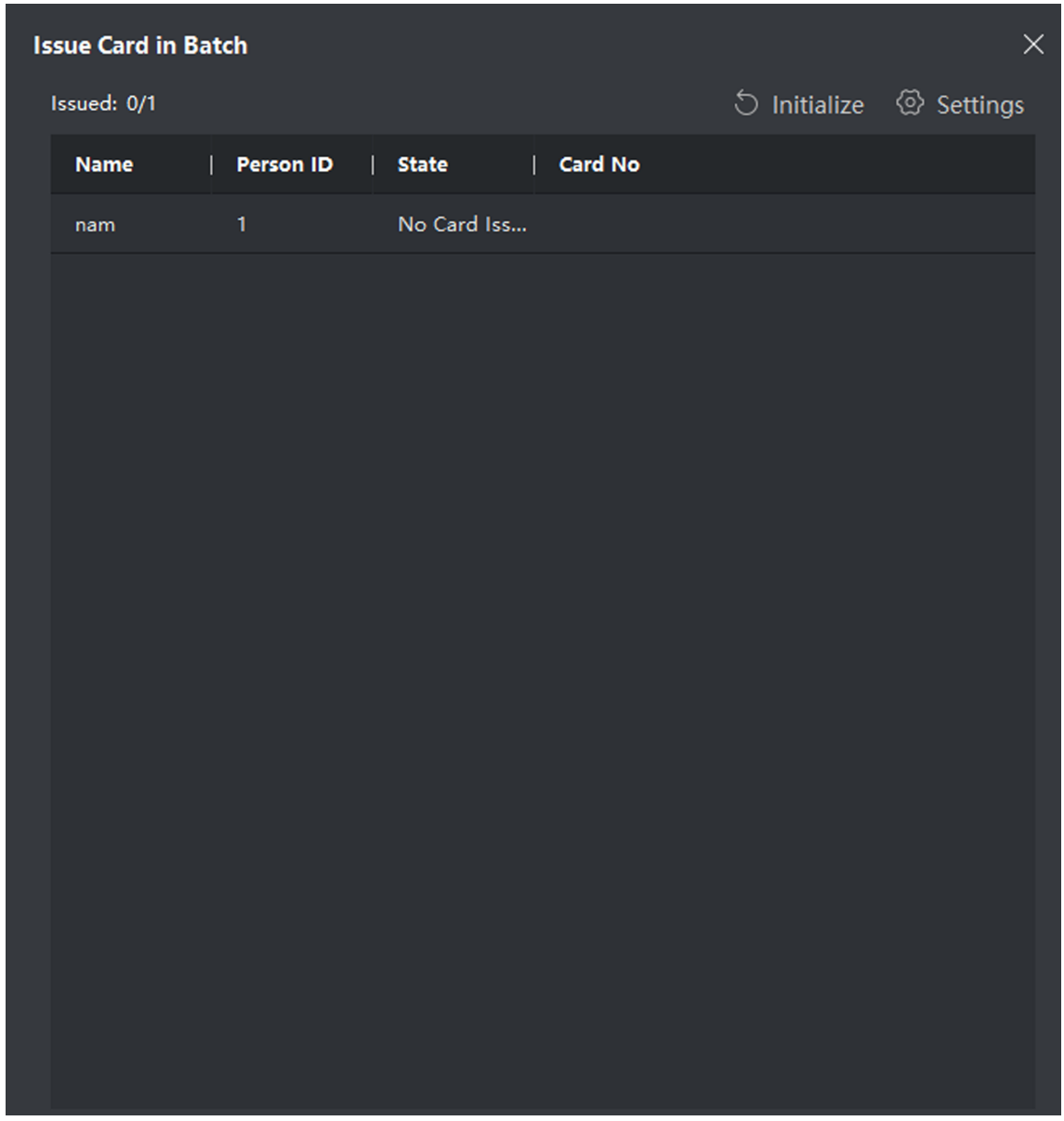

Figure 7-2 Issue Card in Batch

2. Click **Settings**.

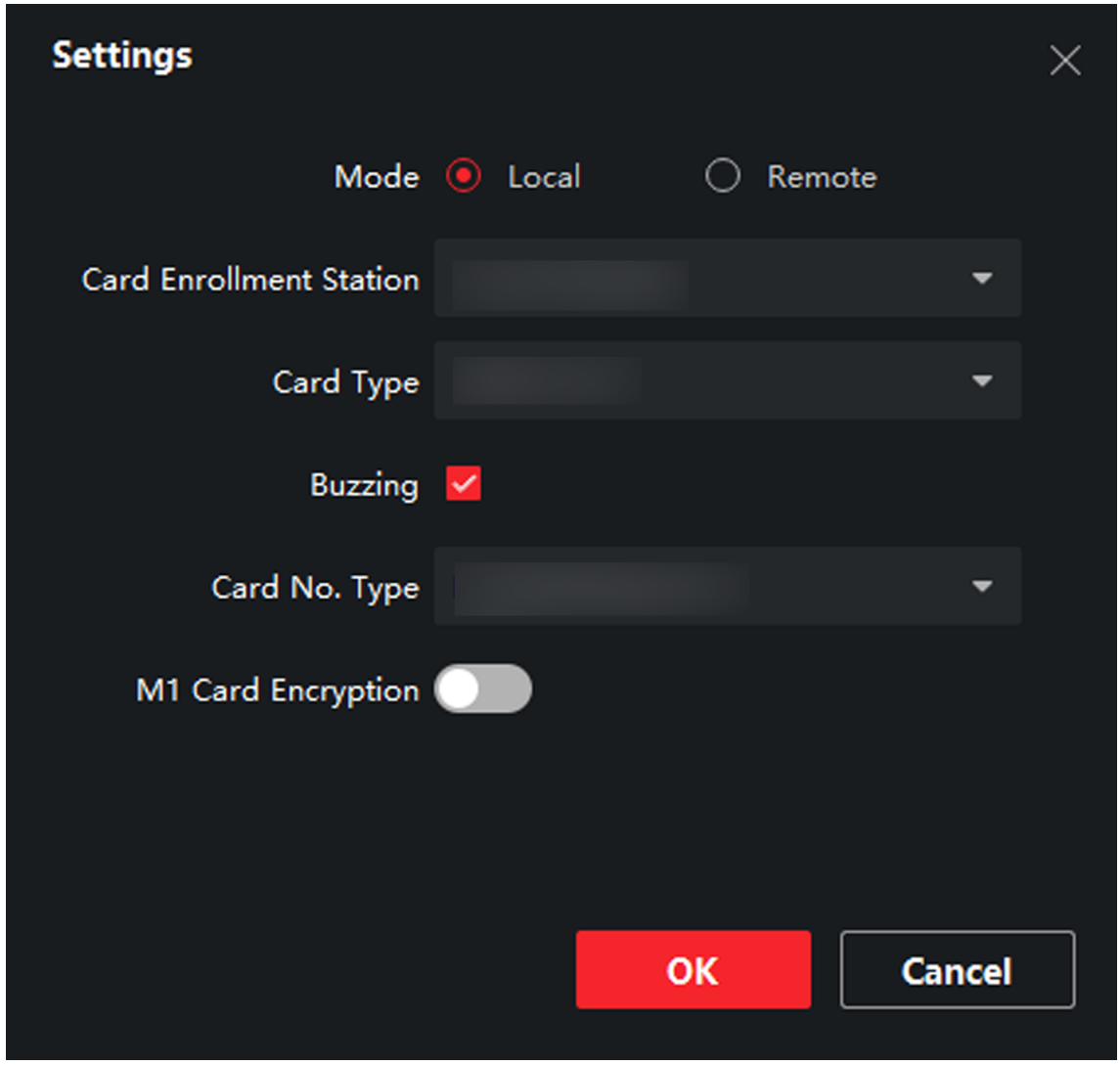

Figure 7-3 Card Settings

3. Select **Card Type** and **Card No. Type**.
4. Click **OK** to save the settings.

Result

After issuing the card to the person, the person and card information will display in the Person(s) with Card Issued list.

7.5 Video Intercom Settings

The Video Intercom Management module provides the function of video intercom, checking call logs and managing notice via the iVMS-4200 Client Software.

Note

For the user with access control module permissions, the user can enter the Access Control module and manage video intercom and search information.

You should add the device to the software and configure the person to link the device in Access Control module before your configuration remotely.

On the main page, click **AccessControlInfo → Video Intercom → Video Intercom** on the left bar to enter the Video Intercom page.

7.5.1 Receive Call from Door Station

Steps

1. Select the client software in the page to start calling the client and an incoming call dialog will pop up in the client software.
2. Click **Answer** to answer the call. Or click **Hang Up** to decline the call.
3. After you answer the call, you will enter the In Call page.

Adjust the Volume of Loudspeaker	Click to adjust the volume of loudspeaker.
Hang Up	Click **Hang Up** to hang up.
Adjust the Volume of Microphone	Click to adjust the volume of microphone.
Unlock Remotely	For door station, you can click to open the door remotely.

Note

- One video intercom device can only connect with one client software.
- The maximum ring duration can be set from 15s to 60s via the Remote Configuration of the video intercom device.
- The maximum speaking duration between indoor station and iVMS-4200 can be set from 120s to 600s via the Remote Configuration of indoor station.
- The maximum speaking duration between door station and iVMS-4200 can be set from 90s to 120s via the Remote Configuration of door station.

7.5.2 Release Notice

You can create different types of notices and send them to the residents. Four notice types are available, including Advertising, Property, Alarm and Notice Information.

Before You Start

Make sure the person has been added to the client.

Steps

1. On the video intercom settings page, click **Notice** to enter the page.
2. Click **+Add** to pop up the adding dialog box.
3. Select the person according to your needs.
4. Edit the **Subject**, **Type** and **Information**.
5. Click **View** to select the picture.
6. Click **Send**.

Note

- Up to 63 characters are allowed in the Subject field.
- Up to 6 pictures in the JPGE format can be added to one notice. And the maximum size of one picture is 512KB.
- Up to 1023 characters are allowed in the Information field.

7.5.3 Search Video Intercom Information

Search Call Logs

Steps

1. On the Video Intercom page, click **Call Log** to enter the page.

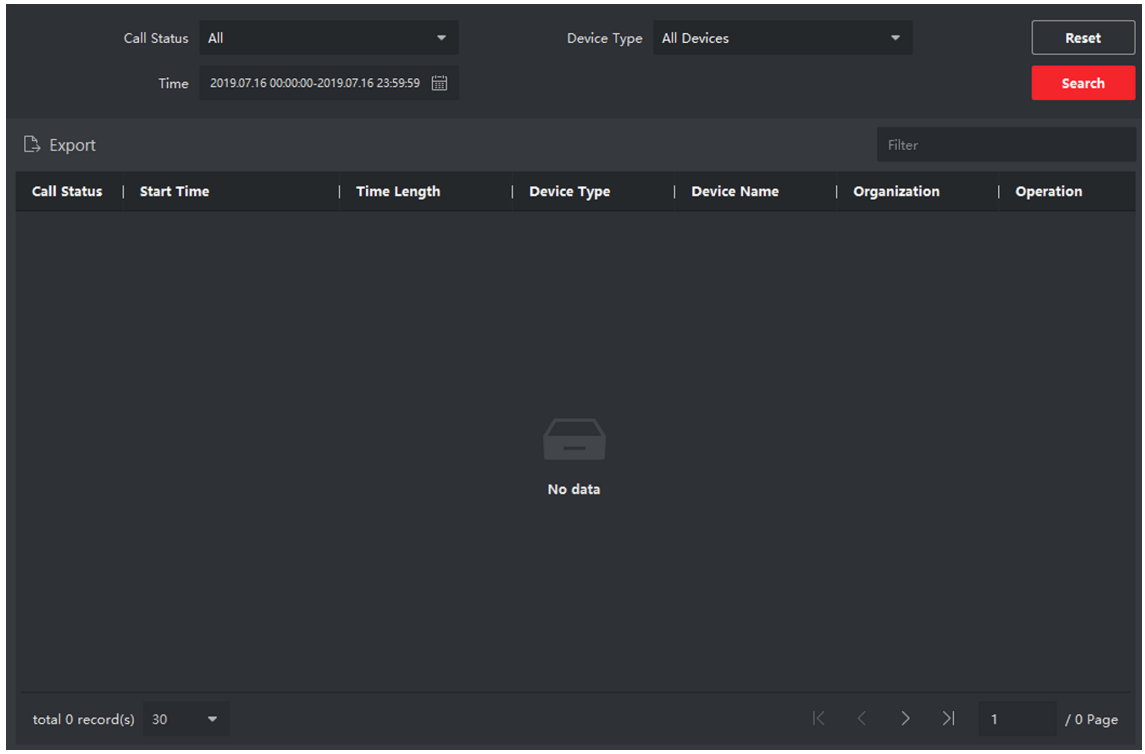

Figure 7-4 Search Call Logs

2. Set the search conditions, including call status, device type, start time and end time.

   Call Status

   Click ˅ to unfold the drop-down list and select the call status as **Dialed**, **Received** or **Missed**. Or select **All** to search logs with all statuses.

   Device Type

   Click ˅ to unfold the drop-down list and select the device type as **Indoor Station**, **Door Station**, **Outer Door Station** or **Analog Indoor Station**. Or select **All Devices** to search logs with all device types.

   Start Time/End Time

   Click the time icon to specify the start time and end time of a time period to search the logs.

   Reset the Settings Click **Reset** to reset all the configured search conditions.

3. Click **Search** and all the matched call logs will display on this page.
4. **Optional:** Check the detailed information of searched call logs, such as call status, ring/speaking duration, device name, resident organization, etc.
5. **Optional:** Input keywords in the Search field to filter the desired log.
6. **Optional:** Click **Export** to export the call logs to your PC.

Search Notice

Steps

1. On the Video Intercom page, click **Notice** to enter the page.
2. Set the search conditions, including notice type, start time and end time.

   Type

   Select **Advertising Information**, **Property Information**, **Alarm Information** or **Notice Information** as **Type** according to your needs.

   Start Time/End Time

   Click the time icon to specify the start time and end time of a time period to search the logs.

   Reset the Settings Click **Reset** to reset all the configured search conditiions.
3. Click **Search** and the matched notice will display on this page.
4. **Optional:** Click **Export** to export the notices to your PC.

7.5.4 Upload Armed Information

Steps

1. On the main page, click upper right → **Tool** → **DeviceGuard** to enter the page.
2. Enable to arm or disarm the device.

   Note

   - While device has been added to the client software, the device armed by default.
   - When the device is armed, the alarm logs upload to the client software automatically.
   - Click **Alarm Application** → **Event Search** to search the alarm logs.
3. **Optional:** Click **Arm All** or **Disarm All** to arm or disarm all the device.

Chapter 8 Video Intercom Operation

8.1 Call Resident

You can press the call button of the door station to call resident.

Note

- Make sure you have added contacts to the device.
- Make sure you have configured the room No. for the call button. For more details. please refer to: ***Press Button to Call***
- The device supports connection with doorbells. If the doorbell is connected, when calling indoor station, the doorbell will ring simultaneously.

8.2 Unlock Door

After issuing card, you can swipe card on the card reading area to unlock the door.

You can swipe card on the card reading area to unlock the door.

Note

Make sure you have issued cards for the device.

- Issue card via Client Software:
  - ***Add Person***
  - ***Issue Card in Batch***
- Issue card via web client:

See Far, Go Further